Cordant™

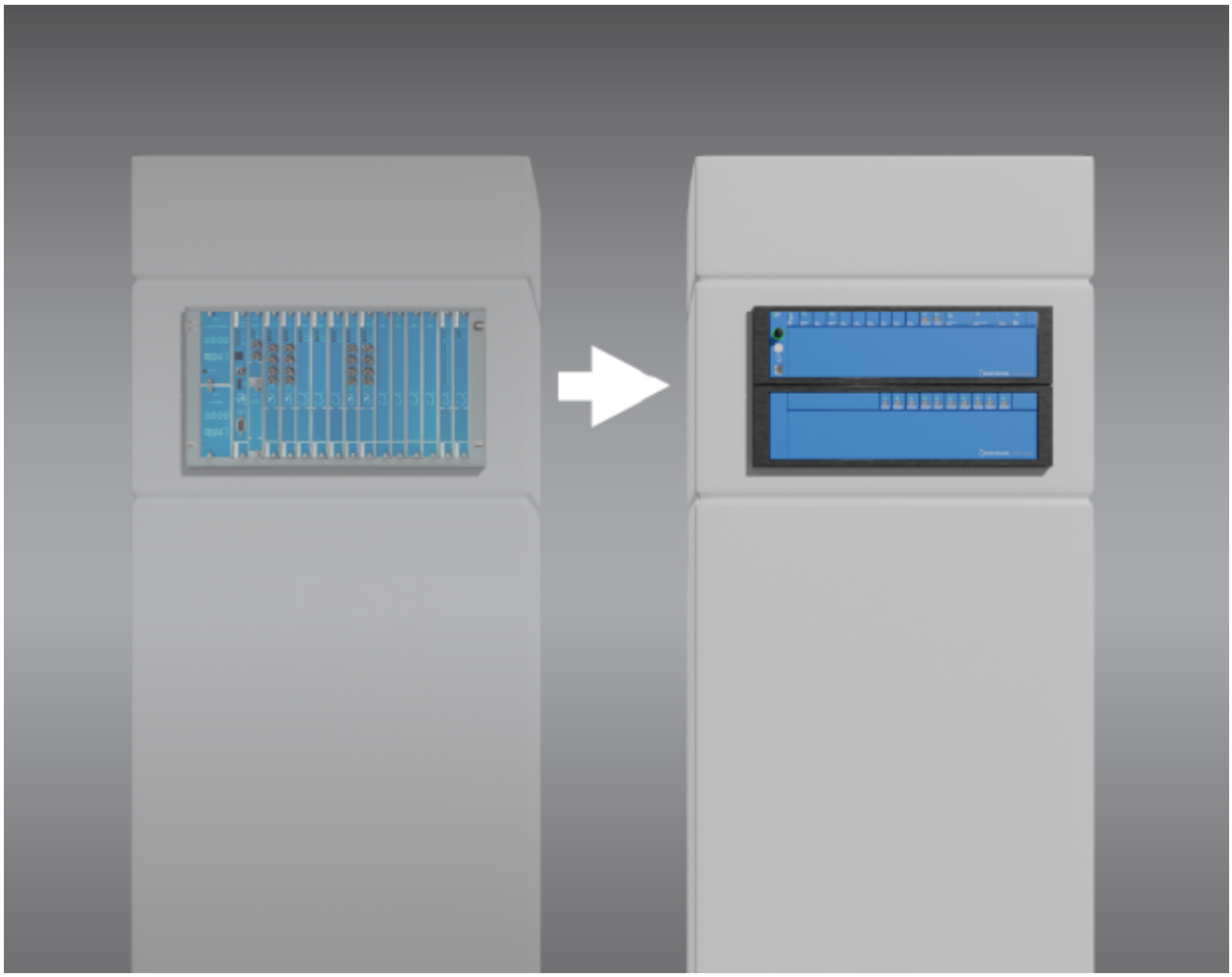

ORBIT 60 SERIES

# 3500 Retrofit

## White Paper

Baker Hughes

154M8092 Rev. E

# Contents


1. Overview ..... 3
2. References ..... 3
3. Application Considerations ..... 3
4. Physical Replacement Options ..... 7
5. Orbit 60 Rack-Mount Retrofit Considerations ..... 9
6. Orbit 60 Panel-Mount Retrofit Considerations ..... 14
7. Orbit 60 Weatherproof Housing (3500/06) Retrofit Considerations ..... 19
8. Orbit 60 Bulkhead-Mount Retrofit Considerations ..... 27
9. Protection Systems ..... 31
10. API 670 Deployments ..... 32
11. Hazardous Areas ..... 33
12. Field Wiring ..... 34
13. Transducers ..... 35
14. Glossary of Terms ..... 36

# 1. Overview

This document provides general recommendations when replacing an existing Bently Nevada™ 3500 monitoring system with an Bently Nevada™ Orbit 60 system, where existing 3500 systems are 19-inch EIA rack mount, panel mount, and bulkhead mount installations. Although this document provides general installation guidelines, each installation is unique and must be evaluated on an individual basis. Replacement of other rack-based systems, such as Bently Nevada 3300, Encore, or competitor systems will be similar, but this document does not describe the specifics of upgrading those systems.

# 2. References

- Comparison of Orbit 60 Series and 3500 White Paper (142M3829)
- Orbit 60 Relay Modules Datasheet (137M0699)
- Orbit 60 System Overview Datasheet (137M5182)
- Orbit 60 System Module User Guide (142M9080)

# 3. Application Considerations

## Customer Intent

The extent of the rack replacement depends on the customer's retrofit goals. These typically fall into one of the following categories:

1. **Modernization**– The existing 3500 installation meets all of the customer's needs, but the system has exceeded its operational life. For SIL installations, this is the defined mission life of the system. An Orbit 60 retrofit installation should generally match functionality 1:1 with the existing system, and the customer does not need or desire advanced features.
2. **Functionality upgrade**– The current 3500 system does not meet the functional needs of the application (for example, using a 3500 to monitor a REB-based balance of plant equipment). For these applications, the system design is similar to a new application and may include sensors, field wiring, and new functionality as needed.
3. **Capacity addition**– Upgrading that includes adding functionality/sensors or machines into the monitoring system. Orbit 60 installations for these retrofits should align with existing installation parameters.
4. **Controls upgrade**– When upgrading as part of a larger machinery retrofit effort, the Orbit 60 installation can be considered as a new installation. All aspects of the installation, other than rack location can be considered, for example, remote I/O using two bridged chassis system.

## Installation Discovery

Addressing the questions below will help ensure a smooth transition during any retrofit installation. Many of these questions will drive the installation scope but will not drive Orbit 60 specific activities. These may include the following (not a complete list):

- Is there a System 1 or TDI secure present?
- Are there any Custom Products modifications to the system?
- What type of Comm Gateway is used?
- Is signal ground tied to the TDI I/O?
- Is any device connected to the BTO Module?
- Is there an earthing module used in the system?
- Are there any triple modular redundant elements in the system?
- Are any multi-mode I/Os used (Hydro or Aeroderivative applications)?
- Are there any unsupported applications utilized for release 1? This would include Hydro, Hyper Recip Compressors, Haz Gas, or Overspeed.

In addition to these general questions, there are differences in Orbit 60 that will drive additional scope or effort to complete the retrofit.

## Relays

**Which type of relay is right for an application?**

Orbit 60 provides two types of relay modules: Electromechanical (EMR) and Solid State Relays (SSR ) Refer to the relay Datasheets and User Guide for detailed proper selection and usage. In general it is recommended to use an SSR for dry contact/control system input applications and an EMR for load switching.

If the load cannot be determined, understanding the installed 3500 module will yield a reasonable guess. Any application connected to a load (an interposing relay, indicator light, for example) should use an Orbit 60 electromechanical relay (EMR). Any 3500 installations connected to a digital input of another system or installed using the gold-plated relay module modification, 3500/33-03, or 3500/33-04 should use an Orbit 60 solid state relay (SSR).

## Recorder Outputs

**How many recorder outputs from the 3500 system are used?**

Orbit 60 input modules do not provide analog recorder output signals. If analog output signals are required for the retrofit, dedicated Recorder Output Modules must be included in the Orbit 60 system, with each card supporting eight output channels. Ensure that the Recorder Output modules are accounted for in the chassis slot count.



Carefully consider the placement of the Recorder Output Modules within the Orbit 60 chassis, in order to closely match the existing 3500 recorder output wiring connection points.

## DC LVDTs

**Does the existing 3500 system include DC LVDT transducers?**

The Orbit 60 PAD module transducer's power for DC LVDTs is -24 Volts, which is greater than the -15 V transducer voltage supplied by 3500/45 Position monitors. Because of this, retrofitting 3500/45 with the Orbit 60 PAD module will increase the Scale Factor and likely shift the Zero Position of the sensor.

Therefore, at the same time the monitor is being replaced, it is necessary to re-commission the DC LVDT sensor with a cold shaft, resetting the voltages for the Upscale and Downscale sensor positions.

Additionally, it is required to replace older DC LVDTs which require more power than the Orbit 60 PAD modules can supply to the Transducers. The Orbit 60 PAD module is fully compatible with Bently Nevada's current offering of DC LVDTs.

## External Termination Blocks

**Does the existing 3500 system use external termination blocks?**

If yes, see 3500 External Terminations on page 34.

## Internal Barriers

**Does the existing 3500 system include internal barrier I/O modules?**

If yes, see Hazardous Areas on page 33.

## Hazardous Area Implementation

**Does the existing installation involve hazardous area certifications?**

The scheme used to meet the installation criteria must be understood, nL, nA, Ic, Ec. See Hazardous Areas on page 33 for details.

## Power Supply Availability

Unlike 3500, Orbit 60 uses commercial, off-the-shelf, 24 V power supplies. For retrofit applications, use redundant power supplies with a minimum of 400 Watts each for single 6U chassis, and with a minimum of 200 Watts each for single 3U chassis. Power supplies are available as part of the Orbit 60 Series options:

**Table 1: Power Supply Options**

| | |
|---|---|
| **240W Power Supply for 3U chassis** | |
| 60X/XPS01 | with options for:<br>• Country-specific codes |
| **480W Power Supply for 6U chassis** | |
| 60X/XPS02 | with options for:<br>• Country-specific codes |

## Display

**Does the existing installation utilize a Bently provided display?**

Unlike the 3500, an Orbit 60 display does not take up a slot in the chassis, but utilizes an external DIN rail-mounted industrial PC to drive the display. If a display is shared by multiple 3500 systems and all 3500s are being replaced, only one display and CPU module needs to be installed.



While an Orbit 60 display can be connected to multiple Orbit 60 systems, it cannot support a mix of 3500 and Orbit 60 systems.

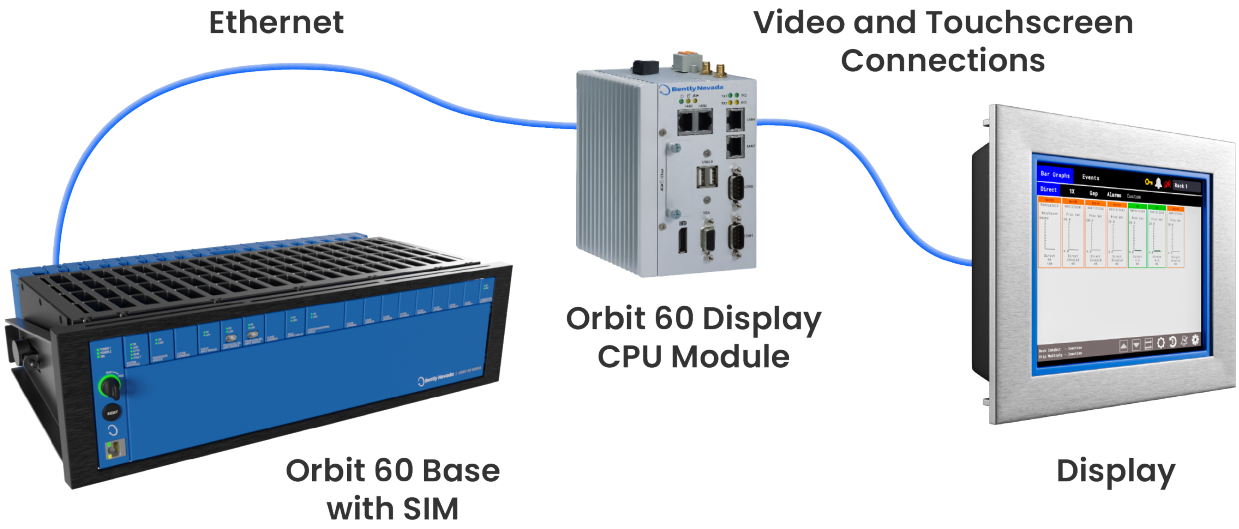


**Figure 1: Orbit 60 Display Connection**

# 4. Physical Replacement Options

3500 replacements should generally use a 6U x 19-inch Orbit 60 Chassis. Smaller point count 3500 applications may be able to use a 3U x 19-inch chassis from a point count and capacity perspective. However, Bently Nevada's recommendation is to generally use the 6U base when possible to fill in the panel/cabinet space and use the integral mounting of power supplies.



6U, 28-Slot
(Bulkhead, Rack, or Panel Mount)



3U, 19-Slot
(Bulkhead, Rack, or Panel Mount)

**Figure 2: 6U and 3U Slot Orbit 60 Chassis Options**

## Orbit 60 3U and 6U Chassis Selection

When considering selecting either an Orbit 60 3U or 6U chassis to retrofit an existing 3500 chassis, here is a summarized recommendation, followed by a table which includes a more detailed list of important differences and potential advantages for selecting between the larger or smaller form-factors.

**Generally, choose a 6U chassis when:**

- The 6U integral power supply mounting is preferred or needed.
- Additional monitoring capacity is needed.

**Generally, choose a 3U chassis when:**

- The 3U monitoring capacity is adequate (including future expansion).
- The installation area has an appropriate DIN-rail location to mount the Power Supplies and external display PC (if desired).

**Table 2: Comparing 6U and 3U Options**

| Category | Advantages and Cautions of Selecting a 6U Chassis | Advantages and Cautions of Selecting a 3U Chassis |
|---|---|---|
| **Monitoring Capacity** | 28 total monitoring slots | 19 total monitoring slots |
| **Chassis Size (Envelope)** | Care must be taken with a 6U replacement since Orbit 60 chassis requires 3 inch (75 cm) ventilation clearance keep-out distances instead of the 3500's 2 inch (50 cm) required ventilation clearance. | The smaller size allows additional clearance between the Orbit 60 and any other existing equipment. (Note: Two 3U Orbit chassis may not be used to replace an existing 3500 in the same location, since this won't provide the necessary ventilation clearances between both 3U chassis.) |
| **Power Supply Mounting** | Chassis includes mounting method for the power supplies, protruding behind the 6U chassis. | Means of Power Supply mounting must be provided by the user. |
| **Rack-mount Cabinet Installation** | The 6U Orbit 60 chassis will fit directly into the existing space of the existing 3500 rack. | An optional retrofit accessory kit with cabinet blanking plates and mounting hardware is available to fill the differences in chassis sizes. |
| **Panel-Mount Cutout Size** | The 6U chassis will replace directly into the existing 3500 opening. | In the future an adapter-plate accessory can be ordered to interface between an existing 3500 opening and the 3U chassis. |

## Panel Mount

The Orbit 60 6U x 19-inch chassis is designed to fit directly into the space used by a 3500 panel mount system. However, it is important to refer to the System Module User Guide's (document 142M9080) recommended panel cutout size. The 60R/CHA05-XXX-X chassis provides the necessary mounting fixtures to support the system within a panel mount cutout.

## 19-inch EIA Rack Mount

For rack mount installations, the Orbit 60 6Ux19-inch rack fits directly into the same space as the 3500 system. A 60R/CHA04-XXX-X chassis can retrofit a rack-mounted 3500 installation. This ordering option contains all the necessary items to rack mount the Orbit 60 system. Additional information regarding retrofits with a 3U chassis is provided below.

## Bulkhead Mount

The 3500-bulkhead installation uses a 12U space when installed. The Orbit 60 system only uses 6U. Other components such as barriers, isolators, or a display computer can occupy the additional space. Bulkhead installations use part number 60R/CHA06-XXX-X and include the mounting hardware necessary for bulkhead mounting of the system.

# 5. Orbit 60 Rack-Mount Retrofit Considerations

## 6U Rack-Mount Retrofit Considerations

An Orbit 60 6U rack-mount system can directly replace a 3500 rack-mount system. Because both systems have a height of 6U, they will occupy the same amount of space on a 19 inch rail. No retrofit kit is needed.

It is important to note that the Orbit 60 6U system has a 3 inch (75 mm) ventilation spacing requirement above and below the chassis compared to the 3500 2 inch (50 mm) ventilation spacing requirement. It is assumed that most 3500 rack-mount installations provide 2U (3.5 inches) of spacing between the system and adjacent hardware.

## 3U Rack-Mount Retrofit Considerations

A rack-mount retrofit kit (part number 60X/RFT01) is offered to simplify the replacement of a 3500 rack-mount chassis with a 3U Orbit 60 chassis.

### Rack-Mount Installation

The 3U rack-mount retrofit kit contains a larger (2U) blanking panel and a smaller (1U) blanking panel. There is no requirement for positioning of either panel, as long as one panel is installed above the Orbit 60 System, and the other is installed below. Mounting in this configuration helps ensure ventilation requirements are met.

Snap-in nuts, mounting screws, and blanking panels are provided with the retrofit kit. Bezel and system mounting brackets are provided with the Orbit 60 system.

**Table 3: 60X/RFT01 Retrofit Kit: Rack Mount Components**

| BN Part Number | Description | Quantity |
|---|---|---|
| 172231 | 1U Blanking Panel | 1 |
| 172232 | 2U Blanking Panel | 1 |
| 2298071 | M6 nut | 14 |
| 179355 | M6 screw | 14 |

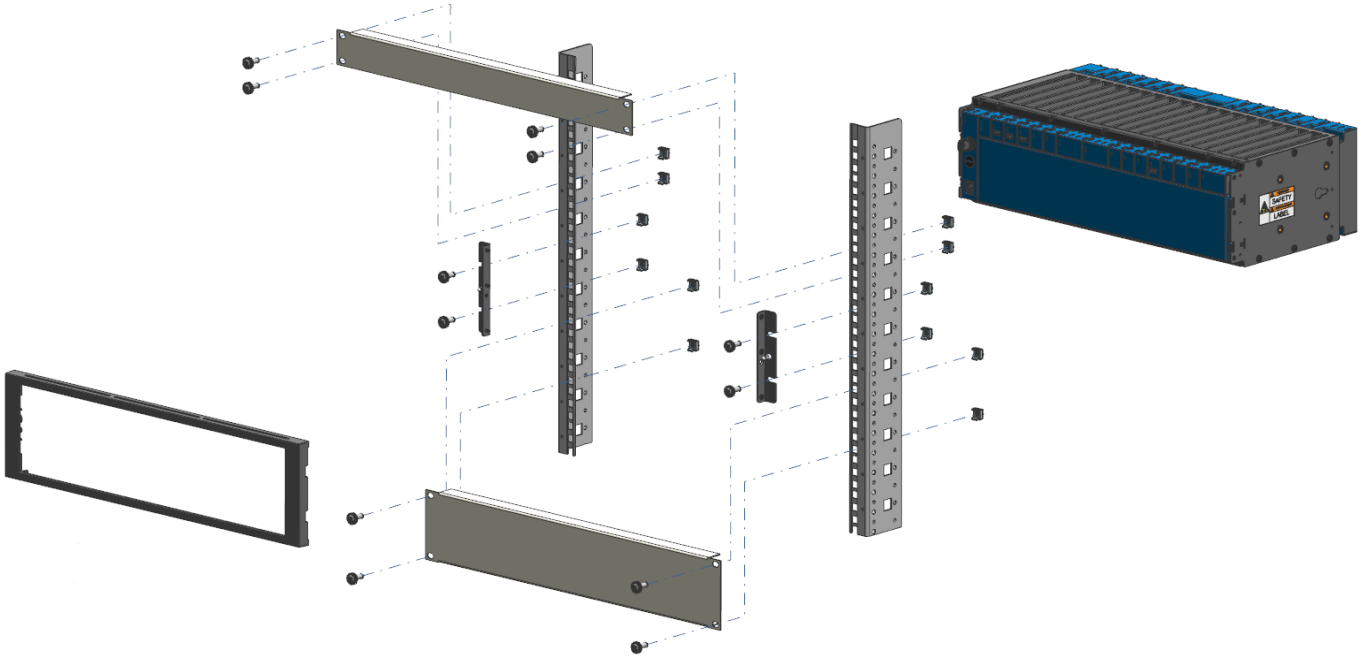

**Figure 3: Rack-Mount Retrofit Kit**

The system mounting brackets supplied with the Orbit 60 system are shown installed separately since these must be attached after the Orbit 60 chassis is inserted from the rear of the cabinet to fit through the cabinet's mounting rails. A 2-person team is recommended for lifting, supporting, and securing the Orbit 60 (one working at the front and the other at the rear of the cabinet.) One of the kit's blanking panels may be used to temporarily support the Orbit 60 chassis while the bracket is fastened to the chassis. Then the chassis should be positioned appropriately as it is secured to the cabinet rails.

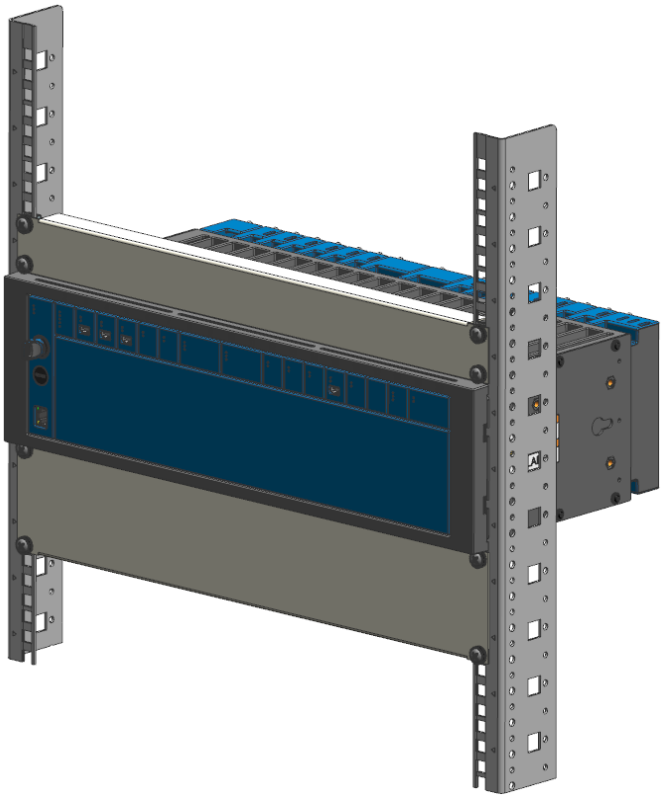

**Figure 4: Retrofit Kit Mounting**

## Ventilation Spacing

To meet ventilation spacing requirements for the Orbit 60 system, there should be no hardware mounted on the 19 inch rail directly adjacent to the smaller (1U) blanking panel (except other blanking panels).

The blanking panels provided with the retrofit kit were selected so that once installed in the cabinet with the 3U Orbit 60 system, there would be no "gaps" left behind by the previously installed 3500. The blanking panels are not meant to ensure ventilation requirements are met; this must be verified. If the existing 3500 system installation met the recommended 2 inch (50 mm) ventilation spacing above and below the 3500 chassis, then there will be ample ventilation spacing for the 3U Orbit 60 retrofit.

If the existing 3500 installation did not meet 3500 ventilation requirements, then it may be necessary to strategically position the larger blanking panel between the 3U Orbit 60 system and other hardware, or the other hardware may have to be moved so that the necessary ventilation clearance of 3 inches (75 mm) above and below the Orbit 60 chassis is maintained. (Orbit 60 ventilation spacing requirements are described in more detail in the *System Module User Guide [document 142M9080]*.)

The blanking panels are not to be used for mounting of any hardware.

## Power Supply and External Display PC Installation for Rack-Mount Chassis

The following additional instructions and tips provide reminders and additional retrofit background, but please refer to the standard installation details provided in the *System Module User Guide*

*(document 142M9080)* general installation instructions.

The 3500 Power Input Modules (PIMs) had a variety of models to accommodate a range of AC and DC power sources. However, the Orbit 60 PIMs only work with a low voltage DC supply. Therefore, the location and installation of AC/DC power supplies is an important retrofit consideration. These detailed considerations include satisfying the necessary ventilation keep-out clearances above and below the power supplies. Also note that the power supplies must be installed on horizontal DIN rail to meet the power supply temperature specifications, and independent redundant power supplies are always recommended.

> Ensure that DC power supplies or External display PC are not installed within the ventilation clearance zone of the Orbit 60 chassis. See *System Module User Guide (document 142M9080)*.

For cabinets with multiple systems installed, it may be difficult to find available room to install the power supplies. Orbit 60 6U systems include a DIN-rail for attaching power supplies behind the chassis, as long as sufficient depth is available. When a 3U Orbit chassis will be used within a cabinet, it is generally recommended to install the necessary power supplies and a display PC (if desired) on an available existing horizontal DIN-rail (typically near the bottom of the cabinet where existing cabinet power supplies and circuit breakers may be installed).

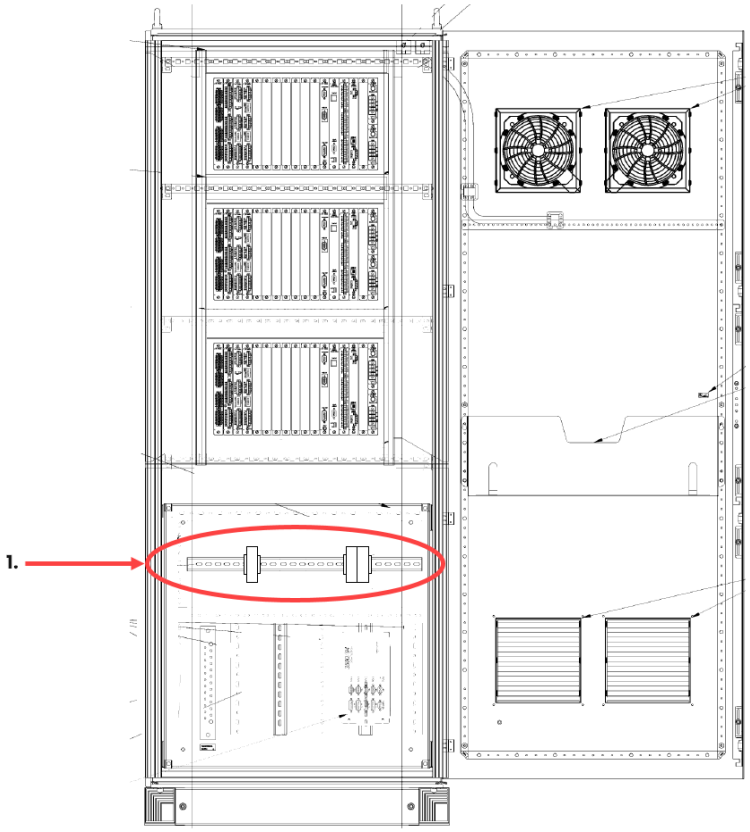


1. Preferred power supply location using existing horizontal DIN-rail.

**Figure 5: Preferred Power Supply Location**

If existing horizontal DIN-rail is not available within the cabinet, then additional DIN-rail may be installed in an appropriate location elsewhere within the cabinet. It is important to maintain

ventilation keep-out clearances above and below the Orbit 60 chassis, the power supplies, or any other equipment within the cabinet. Note that the power supply's required ventilation keep-out clearance is 2.0 inches (50 mm) above and below the units.

> Ensure that power supplies and the high voltage power supply wiring must maintain proper separation distance from signal wiring.

## Power Supply Wiring Connections

Orbit 60 PIMs utilize spring-loaded connections. Therefore, ferruled wires are recommended for the wiring from the DC power supplies. Refer to *System Module User Guide (document 142M9080)* for supported wiring sizes and installation recommendations.

> Wiring sizing requirements must comply with local electrical codes.

Also note that the ground wiring layout differs from the 3500's grounding method which used a switch on the Power Input Module to toggle a connection between common and earth ground. Orbit 60 has both a signal ground and earth ground connection which can be connected separately for Intrinsically safe or other applications. Otherwise, the I.S. and P.E. points should be connected together and grounded.

# 6. Orbit 60 Panel-Mount Retrofit Considerations

## 6U Panel-Mount Retrofit Considerations

An Orbit 60 6U panel-mount system can directly replace a 3500 panel-mount system. The 6U Orbit 60 is designed to fit in the existing 3500 panel cutout opening. No retrofit kit is needed.

### 6U Panel-Mount Installation Overview

1. Remove the existing 3500 system.
2. Remove the Orbit 60 front bezel.
3. Remove the Orbit 60 front chassis mounting brackets via the six 6-32 screws.
4. Slide the Orbit 60 system through the back of the cutout opening.
5. Re-install and secure the Orbit 60 front chassis mounting brackets with the six 6-32 screws.
6. Install and secure the Orbit 60 panel mount clamps.
7. Re-install the Orbit 60 front bezel.



The Orbit 60 6U system has a 3 inch (75 mm) ventilation spacing requirement above and below the chassis compared to the 3500 2 inch (50 mm) ventilation spacing requirement. The Orbit 60 panel mounting brackets can accommodate a maximum panel thickness of 0.19 inches (4.8 mm). Order a standard Orbit 60 6U with panel mount chassis.

## 3U Panel-Mount Retrofit Components

A panel-mount retrofit kit is offered to simplify the replacement of a 3500 panel-mount chassis with a 3U Orbit 60 chassis. Due to the smaller overall height of the 3U Orbit 60 chassis compared to the 3500 chassis, a filler panel is required to cover the larger 3500 panel cutout opening and accommodate the mounting of the 3U Orbit 60. Assuming the existing 3500 panel cutout is within Bently Nevada published dimensional specifications, no additional holes or modifications to the existing 3500 panel cutout are required. The 3U panel-mount retrofit kit is available in powder coated steel (60X/RFT02) or stainless steel (60X/RFT03) versions.

**Table 4: 60X/RFT02 Retrofit Kit Components**

| BN Part Number | Description | Quantity |
|---|---|---|
| 183M5572-01 | Filler Panel (Steel) | 1 |
| 184M2617-01 | Clamp Bracket (Stainless Steel) | 2 |
| 04281412 | #10 Flat Washer (Stainless Steel) | 6 |
| 04375104 | 10-32 Lock Nut (Stainless Steel) | 6 |

| BN Part Number | Description | Quantity |
|---|---|---|
| 04281414 | ¼ Inch Flat Washer (Stainless Steel) | 10 |
| 184M7872 | ¼-20 Inch Lock Nut | 10 |

Two extra #10 flat washers, 10-32 lock nuts, ¼ inch flat washers, and ¼-20 lock nuts are provided with the 60X/RFT02 kit.

**Table 5: 60X/RFT03 Retrofit Kit Components**

| BN Part Number | Description | Quantity |
|---|---|---|
| 183M5572-02 | Filler Panel (Stainless Steel) | 1 |
| 184M2617-01 | Clamp Bracket (Stainless Steel) | 2 |
| 04281412 | #10 Flat Washer (Stainless Steel) | 6 |
| 04375104 | 10-32 Lock Nut (Stainless Steel) | 6 |
| 04281414 | ¼ Inch Flat Washer (Stainless Steel) | 10 |
| 184M7872 | ¼-20 Inch Lock Nut | 10 |

Two extra #10 flat washers, 10-32 lock nuts, ¼ inch flat washers, and ¼-20 lock nuts are provided with the 60X/RFT03 kit.

## 3U Panel-Mount Installation Overview

1. Remove the existing 3500 system.
2. Remove the Orbit 60 front bezel.
3. Remove the Orbit 60 front chassis mounting brackets via the six 6-32 screws.
4. Slide the retrofit filler panel over the front of the Orbit 60 chassis.
5. Re-install and secure the Orbit 60 front chassis mounting brackets with the six 6-32 screws.
6. Secure the Orbit 60 chassis to the retrofit filler panel via the four 10-32 rack mount studs using the provided #10 washers and 10-32 locking nuts.
7. Slide the Orbit 60 chassis and retrofit filler panel through the front of the cutout opening.
8. Secure the retrofit filler panel in the cutout opening with the retrofit clamp bracket using the provided ¼ inch washers and ¼-20 locking nuts via the retrofit filler panel ¼-20 studs.
9. Re-install the Orbit 60 front bezel.

This panel-mount retrofit kit is designed for the Orbit 60 3U **rack-mount chassis**, but this retrofit kit will also accommodate a 3U panel-mount chassis.

## Panel-Mount Installation

The 3U panel-mount retrofit kit utilizes a 11.9 inch x 19.8 inch filler panel (qty 1), stainless clamp brackets (qty 2), #10 stainless steel flat washers (qty 4), 10-32 stainless steel locking nuts (qty 4), ¼ inch stainless steel flat washers (qty 8), and ¼-20 stainless steel locking nuts (qty 8). The filler panel has 10-32 and ¼-20 studs to rack-mount the Orbit 60 chassis to the filler panel and clamp the filler panel to the existing 3500 panel cutout. (These front studs will not be used if a 3U chassis with panel-mount brackets is utilized.)

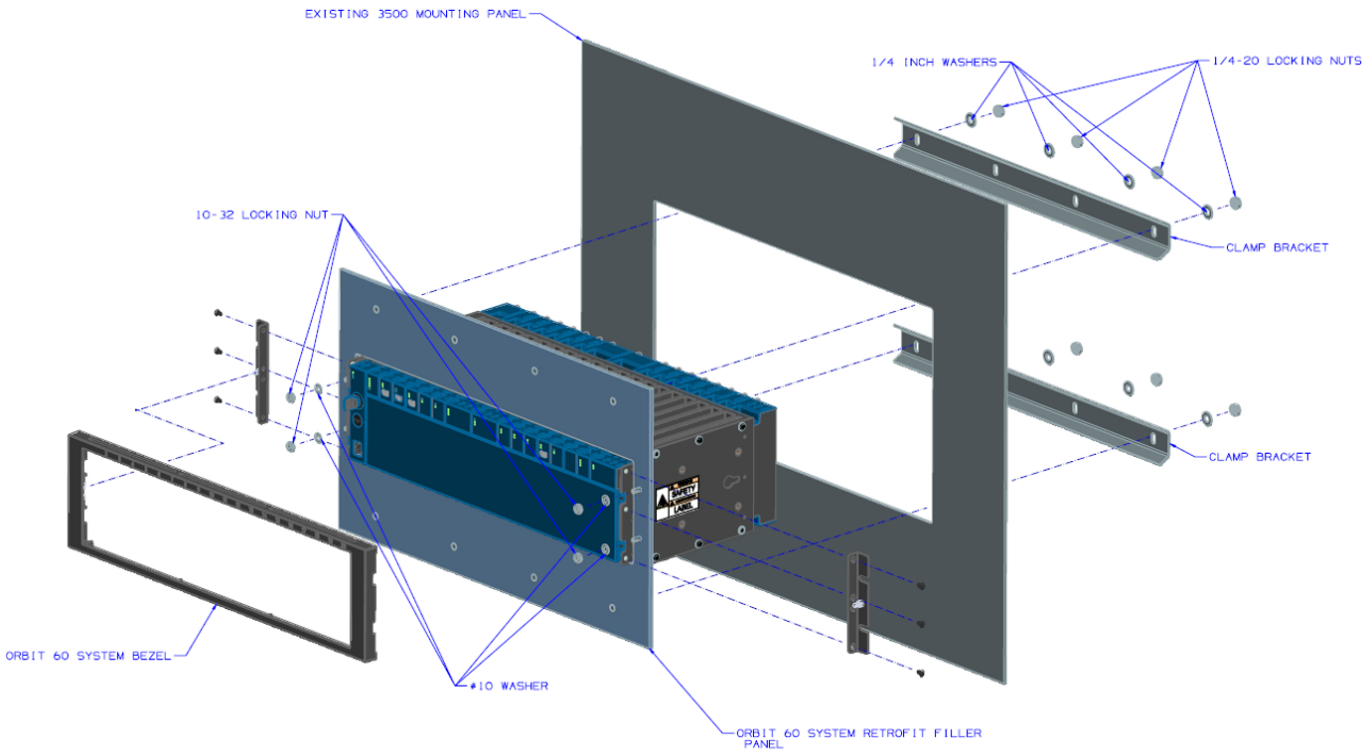


**Figure 6: Panel-Mount Retrofit Kit Assembly (See Drawing 184M4900)**

The clamp brackets include markings indicating the correct orientation to ensure the longer leg of the bracket faces the Orbit 60 3U chassis. When installed correctly, the Orbit 60 panel-mount retrofit kit clamps can accommodate an existing 3500 panel cutout maximum thickness of 0.25 inches (6.4 mm).

The Orbit 60 chassis mounting brackets that are supplied with the Orbit 60 system must be removed to mount the filler panel to the Orbit 60 chassis and then reinstalled. A 2-person team is recommended for lifting, supporting, and securing the Orbit 60 chassis and filler panel into the existing 3500 panel cutout using supplied clamp brackets.

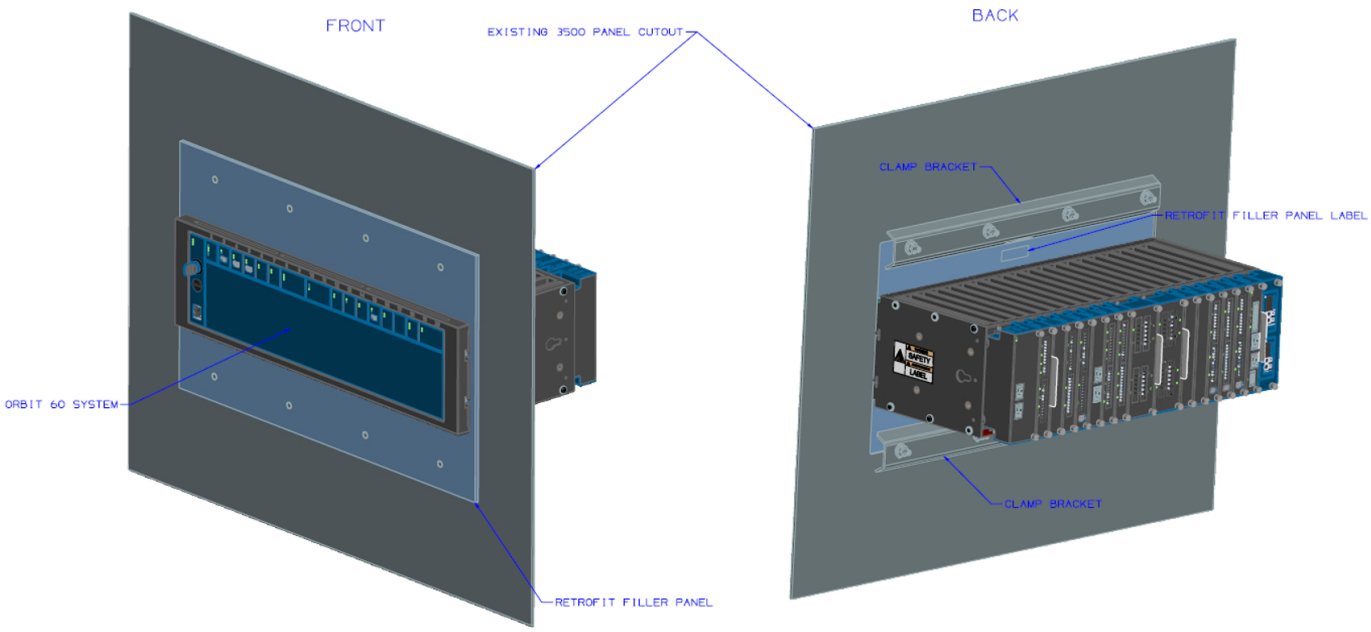


**Figure 7: Assembled Panel-Mount Retrofit Assembly**

## Ventilation Spacing

To meet ventilation clearance requirements for the Orbit 60 system, there should be no hardware mounted within the 3 inches (75 mm) above or below the Orbit 60 chassis. Orbit 60 ventilation spacing requirements are described in more detail in the *System Module User Guide (document 142M9080)*.

## Power Supplies

> This panel-mounted retrofit kit does not provide additional mounting hardware (such as a DIN-rail) for external power supplies, external barriers, or an external display PC. Users must secure their own method for accommodating these.

The 3500 Power Input Modules (PIMs) had a variety of models to accommodate a range of AC and DC power sources. However, the Orbit 60 PIMs only work with a low voltage DC supply. Therefore, the location and installation of AC/DC power supplies is an important retrofit consideration. These detailed considerations include satisfying the necessary 2 inch (50 mm) ventilation keep-out clearances above and below the power supplies. Also note that the power supplies must be installed on horizontal DIN rails to meet the power supply temperature specifications, and independent redundant power supplies are always recommended.

> Ensure that power supplies and the high voltage power supply wiring maintains proper separation distance from signal wiring.

## Power Supply Wiring Connections

Orbit 60 PIMs utilize spring-loaded connections. Therefore, ferruled wires are recommended for the wiring from the DC power supplies. Refer to *System Module User Guide (document 142M9080)* for supported wiring sizes and installation recommendations.

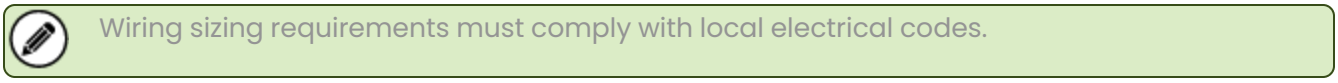


Also note that the ground wiring layout differs from the 3500's grounding method which used a switch on the Power Input Module to toggle a connection between common and earth ground. Orbit 60 has both a signal ground and earth ground connection which can be connected separately for Intrinsically safe or other applications. Otherwise, the I.S. and P.E. points should be connected together and grounded.

# 7. Orbit 60 Weatherproof Housing (3500/06) Retrofit Considerations

### Weatherproof Housing (3500/06) Version Compatibility

While the 3500/06 is available with a wide range of configuration options, only the following configuration options of fully contained enclosures using a full-sized 3500 rack are compatible with the 3U Weatherproof Housing (WPH) Retrofit adapter kit:

- 3500/06-01-BB-CC-DD Powder-coated steel housing (full sized rack)
- 3500/06-02-BB-CC-DD Stainless steel housing (full sized rack)

## Orbit 60 Weatherproof Housing Cautions and Limitations

### WPH Retrofits not compatible with 6U Chassis

An Orbit 60 6U chassis is not compatible with the 3500/06 WPH with any retrofit kit or any other adapter. The 3500/06 does not meet ventilation clearance requirements and there is no means to secure the Orbit 60 system within the 3500/06 housing. A 3U Orbit 60 chassis is always recommended when replacing an existing 3500 rack within its 3500/06 WPH.

### WPH Retrofit Kit not compatible with Door Only Version

Currently, the Orbit 60 3U WPH Retrofit Kit is not compatible for installations with the 3500/06 'door only' full-sized rack versions (3500/06-03-BB-CC-DD or 3500/06-04-BB-CC-DD) or 'door only' mini-rack versions (3500/06-05-BB-CC-DD or 3500/06-06-BB-CC-DD). The 3U WPH retrofit kit only supports the 'Fully Enclosed' WPH versions.

### WPH Retrofit Kit not compatible with Mini-rack

Due to the physically wider chassis of the Orbit 60 chassis, the 3U WPH Retrofit Kit Orbit 60 systems are NOT compatible with any of the 3500/06 mini-rack versions (3500/06-07-BB-CC-DD, 3500/06-08-BB-CC-DD, 3500/06-05-BB-CC-DD or 3500/06-06-BB-CC-DD). Retrofitting 3500 system mini-rack installations will require individual evaluation.

### WPH Retrofit Kit not directly compatible with 3500 Internal Barriers

Since the Orbit 60 system does not support internal barriers, replacing an internal-barrier 3500 system will require extra evaluation and custom installation/solution. Due to space constraints within the WPH, the external barriers required for the Orbit 60 would need to be installed in an additional, separate weather-proof housing.

## Orbit 60 3U Chassis 3500/06 Weatherproof Housing Installation

Beyond the above exceptions, the 60X/RFT04 retrofit kit (nickel plated steel filler panel), an Orbit 60 3U rack-mount chassis and external power supplies can be retrofitted within an existing 3500/06 weatherproof housing (powder-coated or stainless steel) without physical modification of the installed 3500/06. This retrofit kit utilizes a width-adjustable two-piece filler panel and power supply

mounting hardware to aid during installation and provide DIN rail mounting locations for the external power supplies. The Orbit 60 front mounting brackets are not utilized with this kit as the two-piece filler panel has integrated front mounting supports. Any of the Orbit 60 3U chassis variants (rack mount, panel mount, or bulkhead) are compatible as the Orbit 60 front chassis mounting brackets or panel mount brackets are not used. A T10 Torx L-key and 5/32 hex L-key is provided with the kit to aid in the installation.

**Table 6: 60X/RFT04 Weatherproof Housing Retrofit Kit Components**

| BN Part Number | Description | Quantity |
|---|---|---|
| 187M5594-01 | Filler Panel Sections (Nickel-Pated Steel) | 2 |
| 04344178 | 10-32 Phillips screw (Stainless Steel) | 14 |
| 04281412 | #10 Flat Washer (Stainless Steel) | 14 |
| Rear Bracket Hardware | | |
| 184M4356-01 | Power Supply Bracket (Aluminum) | 2 |
| 187M8163 | ¼-20 countersink Screws | 10 |
| 130924-0500 | 5" 35mm DIN rail | 2 |
| Provided Tools | | |
| 184M7874 | T10 Torx L-Key | 1 |
| 187M8168 | 5/32 Hex L-Key | 1 |

Two extra 10-32 Phillips screws, #10 flat washers, and ¼-20 countersink screws are provided with the 60X/RFT04 kit.

## 60X/RFT04 Retrofit Kit Installation Overview

Complete installation instructions can be found in document 187M1495. Completely review the 187M1495 assembly details prior to starting any retrofit.

1. Remove the existing 3500 system and disconnect the associated field wiring.
2. Remove Orbit 60 front bezel and front chassis mounting bracket (via six 6-32 screws) and panel mount clamps (if ordered) but keep the screws for fastening to the adapter.
3. Secure the kit's aluminum power supply mounting brackets with eight ¼-20 hex flat head screws to each side of the Orbit 60 chassis.
4. Loosely assemble the two halves of the retrofit filler panel.
5. Insert the Orbit 60 chassis with the attached power supply mounting brackets through the rear opening of the 3500/06 housing. Push the Orbit 60 as far forward as possible through the front opening of the housing.
6. Attach the filler panel to the Orbit 60 chassis reusing the (qty 6) 6-32 screws.

7. Secure the filler panel to the front of the housing with the (qty 4) 10-32 screws.
8. Tighten the remaining (qty 4) 10-32 screws which secure the two filler panel sections.
9. Attach the two DIN rails using the (qty 4) 10-32 screws to the power supply mounting brackets.
10. When using local AC power sources, install the two DC Power Supplies on either DIN rail. Then terminate to external power wiring. Complete by terminating the sensor field wiring to the Orbit 60 system.

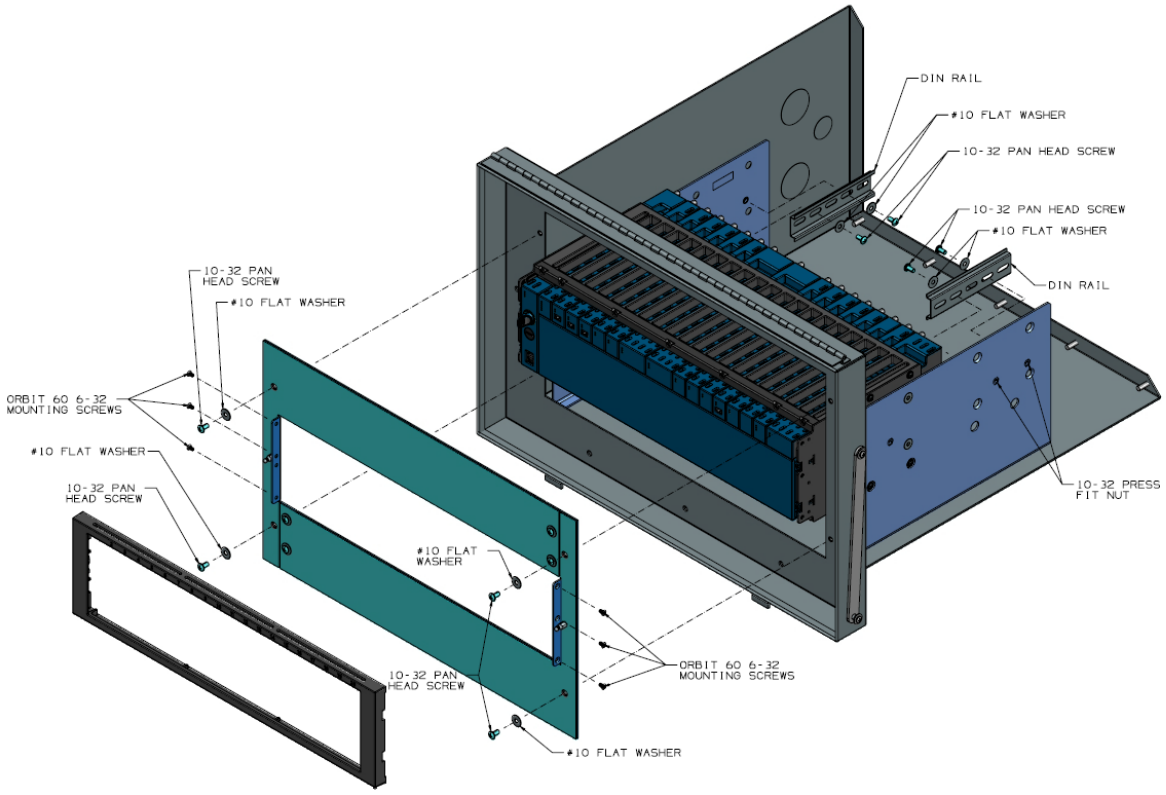


**Figure 8: 60X/RFT04 Retrofit Kit Assembly (3500/06 housing top and side not shown for visibility, See Installation Document 187M1495)**

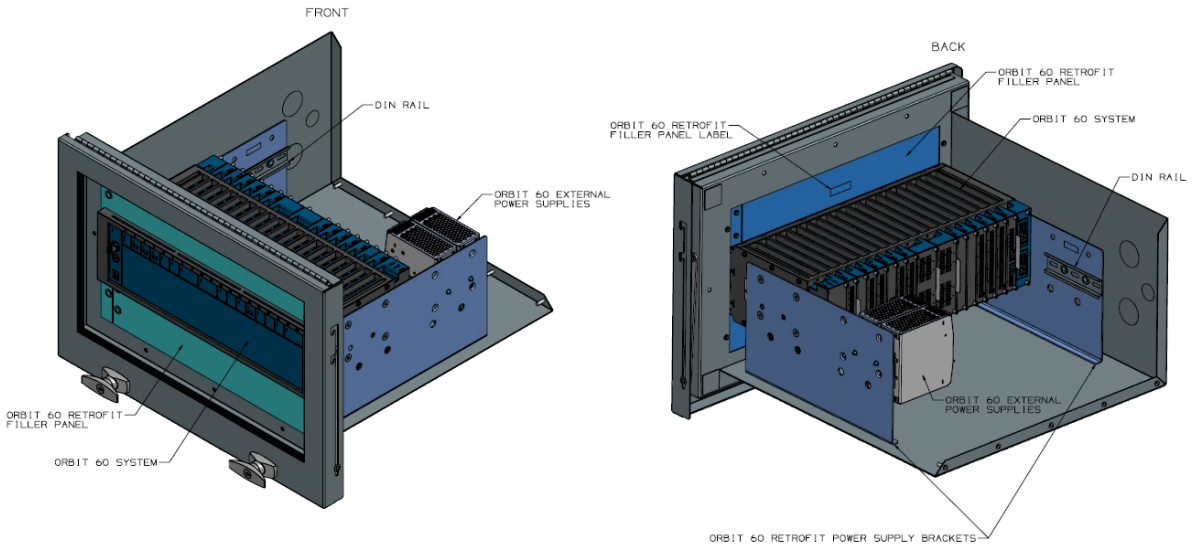


**Figure 9: Assembled 60X/RFT04 Retrofit kit (3500/06 housing top and side not shown for visibility, See Installation Document 187M1495)**

## Ventilation Spacing and Cooling Requirements

To meet ventilation clearance requirements for the Orbit 60 system, there should be no hardware mounted within the 3 inches (75 mm) above or below the Orbit 60 chassis. Orbit 60 ventilation spacing requirements are described in more detail in the System Module User Guide (document 142M9080). This retrofit kit maintains this 3-inch ventilation spacing requirement within the 3500/06 housing.

Within the 3500/06 housing, do not place any equipment or objects below or above the Orbit 60 3U chassis that would restrict cooling airflow.

When using the 3500/06 weatherproof housing, precautions should be taken to avoid operating the Orbit 60 system above the systems temperature specifications. Due to the heat dissipation by the Orbit 60 system, do not install the 3500/06 housing in direct sunlight.

Exceeding the specified operating temperature of the Orbit 60 system may degrade the reliability of the monitoring system and potentially ignite some gases.

Before installing an Orbit 60 system within a 3500/06 housing, consult with Figure 10 to ensure proper ambient temperature requirements are met.

If Orbit 60 system external power supplies are installed within the 3500/06 housing, multiply the power consumption of the Orbit 60 system by 1.07 to account for the heat generated by the power supplies..

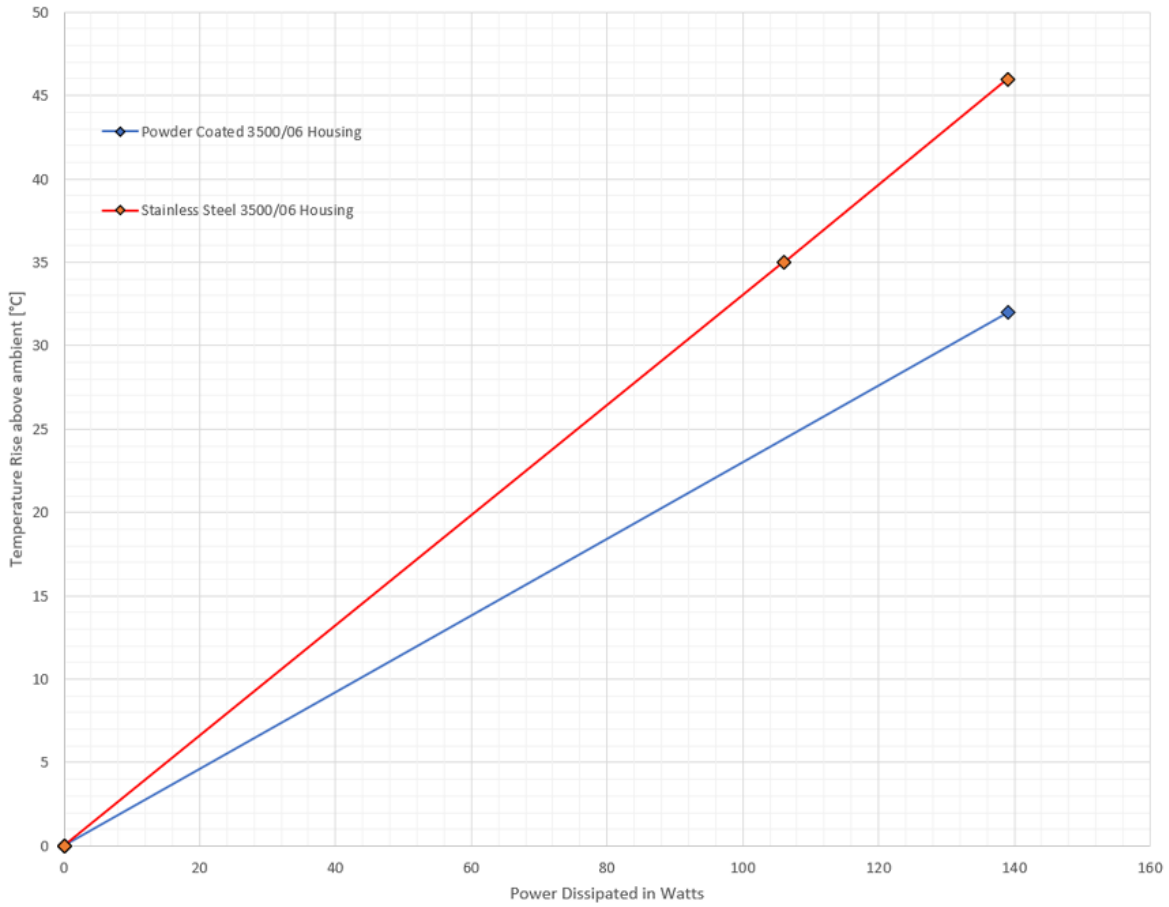


**Figure 10: Orbit 60 Temperature Derating Graph**

Table 7 and Table 8 are air purge specifications for the 3500/06 weatherproof housing.

**Table 7: N.F.P.A. 496 5X Air Purge Specifications (Source Document 141528)**

| Pressure | | Flow through air purge pipe | | Time for purging weatherproof housing |
|---|---|---|---|---|
| in. of water | kPa | cu. ft,/min. | $m^3$/hour | minutes |
| 1.0 | 0.25 | 1.08 | 1.83 | 14 |
| 1.5 | 0.37 | 1.25 | 2.12 | 12 |
| 2.0 | 0.50 | 1.42 | 2.42 | 11 |
| 2.5 | 0.62 | 1.57 | 2.67 | 10 |
| 3.0 | 0.75 | 1.72 | 2.92 | 9 |
| 3.5 | 0.87 | 1.85 | 3.14 | 8 |
| 4.0 | 1.00 | 2.00 | 3.40 | 8 |

| Pressure | | Flow through air purge pipe | | Time for purging weatherproof housing |
|---|---|---|---|---|
| in. of water | kPa | cu. ft,/min. | m3/hour | minutes |
| 4.5 | 1.12 | 2.11 | 3.58 | 8 |
| 5.0 | 1.25 | 2.22 | 3.77 | 7 |
| 5.5 | 1.37 | 2.33 | 3.96 | 7 |
| 6.0 | 1.50 | 2.42 | 4.11 | 7 |
| 6.5 | 1.62 | 2.50 | 4.25 | 6 |
| 7.0 | 1.74 | 2.59 | 4.40 | 6 |
| 7.5 | 1.87 | 2.67 | 4.54 | 6 |
| 8.0 | 1.99 | 2.74 | 4.66 | 6 |
| 8.5 | 2.12 | 2.80 | 4.76 | 6 |
| 9.0 | 2.24 | 2.87 | 4.88 | 6 |
| 9.5 | 2.37 | 2.93 | 4.98 | 6 |
| 10.0 | 2.49 | 3.00 | 5.10 | 5 |

**Table 8: 10X Purge per Canadian Electrical Code C22.1, Part 1 Air Purge Specifications**

| Pressure | | Flow through air purge pipe | | Time for purging weatherproof housing |
|---|---|---|---|---|
| in. of water | kPa | cu. ft,/min. | m3/hour | minutes |
| 1.0 | 0.25 | 1.08 | 1.83 | 14 |
| 1.5 | 0.37 | 1.25 | 2.12 | 12 |
| 2.0 | 0.50 | 1.42 | 2.42 | 11 |
| 2.5 | 0.62 | 1.57 | 2.67 | 10 |
| 3.0 | 0.75 | 1.72 | 2.92 | 9 |
| 3.5 | 0.87 | 1.85 | 3.14 | 8 |
| 4.0 | 1.00 | 2.00 | 3.40 | 8 |
| 4.5 | 1.12 | 2.11 | 3.58 | 8 |
| 5.0 | 1.25 | 2.22 | 3.77 | 7 |
| 5.5 | 1.37 | 2.33 | 3.96 | 7 |

| Pressure | | Flow through air purge pipe | | Time for purging weatherproof housing |
|---|---|---|---|---|
| in. of water | kPa | cu. ft,/min. | m3/hour | minutes |
| 6.0 | 1.50 | 2.42 | 4.11 | 7 |
| 6.5 | 1.62 | 2.50 | 4.25 | 6 |
| 7.0 | 1.74 | 2.59 | 4.40 | 6 |
| 7.5 | 1.87 | 2.67 | 4.54 | 6 |
| 8.0 | 1.99 | 2.74 | 4.66 | 6 |
| 8.5 | 2.12 | 2.80 | 4.76 | 6 |
| 9.0 | 2.24 | 2.87 | 4.88 | 6 |
| 9.5 | 2.37 | 2.93 | 4.98 | 6 |
| 10.0 | 2.49 | 3.00 | 5.10 | 5 |

## Power Supplies

The 60X/RFT04 retrofit kit provides two DIN-rail mounting locations for Orbit 60 system external power supplies within the 3500/06 housing. Two Orbit 60 external power supplies can be installed together on either DIN-rail or one power supply on each DIN-rail.

The 3500 Power Input Modules (PIMs) had a variety of models to accommodate a range of AC and DC power sources. However, the Orbit 60 PIMs only work with a low voltage DC supply. Therefore, the location and installation of AC/DC power supplies is an important retrofit consideration. These detailed considerations include satisfying the necessary 2 inch (50 mm) ventilation keep-out clearances above and below the power supplies. Note that the power supplies must be installed on horizontal DIN-rails to meet the power supply temperature specifications, and independent redundant power supplies are always recommended.



Ensure that power supplies and the high voltage power supply wiring maintains proper separation distance from signal wiring.

## Power Supply Wiring Connections

Orbit 60 PIMs utilize spring-loaded connections. Therefore, ferruled wires are recommended for the wiring from the DC power supplies. Refer to System Module User Guide (document 142M9080) for supported wiring sizes and installation recommendations.



Wiring sizing requirements must comply with local electrical codes.

Also note that the ground wiring layout differs from the 3500's grounding method which used a switch on the Power Input Module to toggle a connection between common and earth ground. Orbit 60 has both a signal ground and earth ground connection which can be connected separately for

Intrinsically safe or other applications. Otherwise, the I.S. and P.E. points should be connected and grounded.

# 8. Orbit 60 Bulkhead-Mount Retrofit Considerations

A bulkhead-mount retrofit kit (part number 60X/RFT06) is offered to easily facilitate the replacement of a 3500 bulkhead-mount chassis with an Orbit 60 chassis. The kit provides an adapter plate that enables Orbit 60 chassis mounting using existing 3500 mounting hardware (mounting studs/bolts). The bulkhead-mount retrofit kit is compatible with both 3U and 6U Orbit 60 chassis.

## Bulkhead Mount Installation

The bulkhead mount retrofit kit contains an adapter plate, two optional DIN rails for accessory mounting, and M6 mounting hardware.

**Table 9: 60X/RFT06 Retrofit Kit: Bulkhead Mount Components**

| BN Part Number | Description | Quantity |
|---|---|---|
| 185M0271-01 | Retrofit Adapter Plate | 1 |
| 183M2774 | M6 Nut | 1 |
| 186M2908 | M6 Washer | 18 |
| 186M0470-01 | 425 mm long DIN rail | 1 |
| 186M0471-01 | 475 mm long DIN rail | 1 |
| 149M4972-01 | Orbit 60 bulkhead mounting bracket | 4 |
| DIN Rail Accessories | | |
| 186M2918 | Momentary push button | 1 |
| 186M2906 | 2 position key switch | 1 |
| 186M5134 | Contact block with screw terminals | 2 |
| 186M2905 | DIN rail component mounting adapter | 2 |

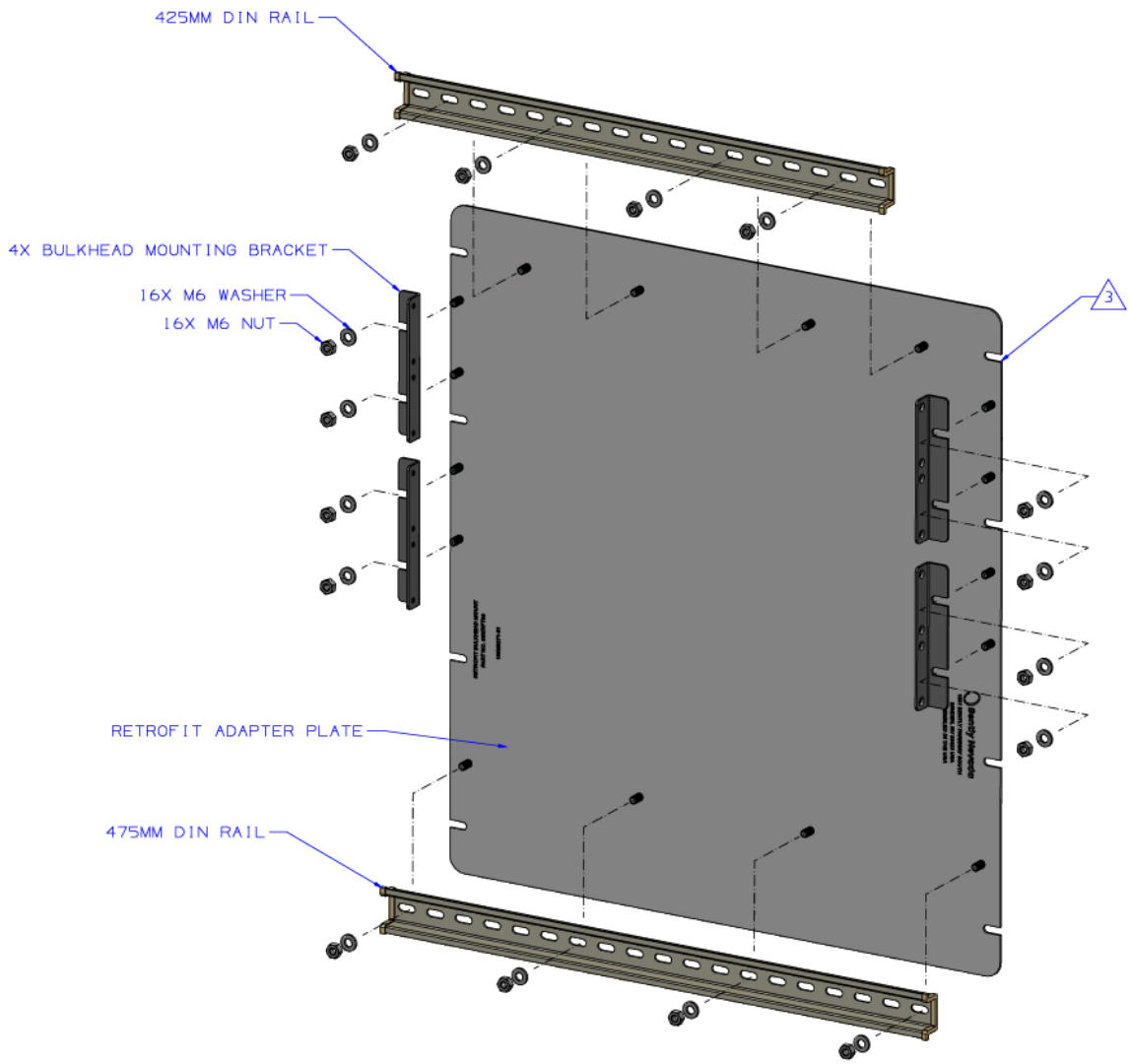


**Figure 11: Bulkhead-Mount Retrofit Kit**

After removing the 3500, the adapter plate can be mounted using the same mounting hardware that was used for 3500.

> It may be necessary to replace excessively aged hardware. Inspect hardware for rust/corrosion or damage which could compromise the effectiveness of the fasteners.

Once the adapter plate is mounted, the Orbit 60 chassis may be mounted to the adapter plate using the bulkhead mount brackets and M6 hardware.

## 3U Chassis Mounting & DIN Rail Usage

The 3U Orbit 60 chassis may be mounted to the adapter plate in 1 of 2 locations. The chassis can be mounted using the 4 M6 studs closest to adapter plate etching (which contains the Bently Nevada logo and Part Number information), or it can be mounted using the 4 studs that are further from the etching. The image below shows the 3U mounted closer to the etching. In this configuration, there is enough clearance for both the 475 mm and 425 mm DIN Rail to be used for accessory mounting. This

configuration may be helpful, for example, when mounting external barriers on the 425 mm DIN Rail and still allowing power supplies and/or external display PC to be installed on the 475 mm DIN Rail. If the 3U is mounted further away from the etching, the 425 mm DIN Rail can't be used. Generally, the preferred location of the 3U chassis will be the one that aligns best with the existing field wiring.

The adapter plate and Orbit 60 chassis may be installed in any orientation provided that the 3U system is mounted upright. The orientation shown below is for reference only. Only one 3U system can be mounted on the adapter plate.

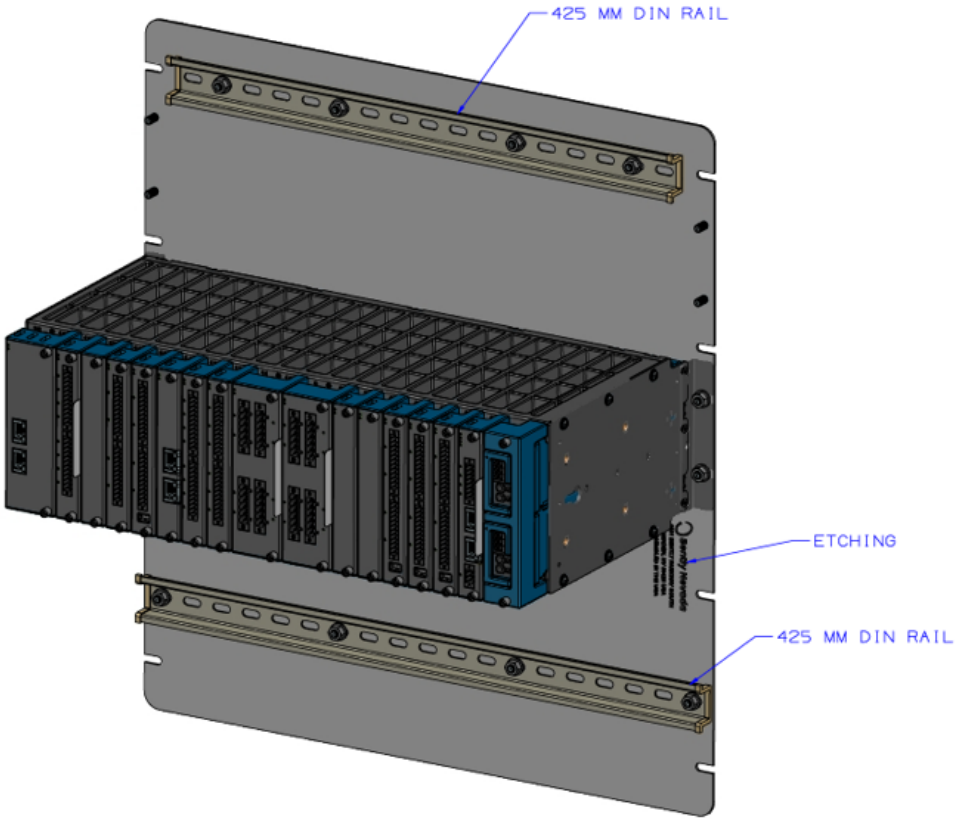


**Figure 12: Example of Mounting on the Adapter Plate**

## 6U Chassis Mounting & DIN Rail Usage

The 6U Orbit 60 chassis must be mounted to the adapter plate using the 8 M6 studs, as shown below. The 425 mm DIN Rail can't be used with a 6U chassis.

Like the 3U, the adapter plate and the 6U chassis can be mounted in any orientation provided that the 6U system is mounted upright. The orientation shown below is for reference only.

The mounting brackets supplied with the 6U system must be removed and replaced with the 4 brackets supplied with the bulkhead retrofit kit. This provides clearance for the adapter plate mounting hardware.

The power supplies can be mounted on the 6U system as shown if the enclosure depth can accommodate the additional depth of the power supplies mounted on the 6U system. Alternatively, the power supplies can be installed on the 475 mm DIN Rail to match the depth of the existing 3500 bulkhead rack.

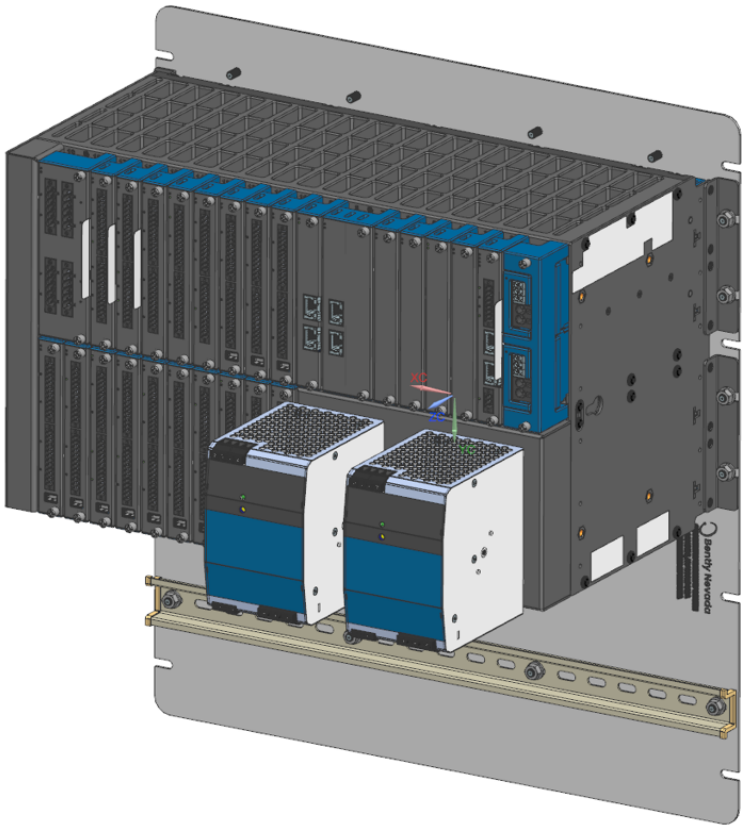

**Figure 13: Chassis Mount Example**

## Ventilation Spacing

The required ventilation spacing of 3 inches (75 mm) above and below the Orbit 60 chassis must be maintained when mounting accessories to the DIN Rail. For this reason, the power supply can **not** be mounted to the 425 mm DIN Rail. Take care when using the DIN Rail to maintain ventilation spacing. (Orbit 60 ventilation spacing requirements are described in more detail in the *System Module User Guide [document 142M9080]*.)

## DIN Rail Accessories

A two-position key switch and a momentary push button are provided with the bulkhead-mount retrofit kit. These off-the-shelf accessories are meant to provide an alternative solution to the Rack Reset push button and Run/Program key switch switch functionality found on a 3500 bulkhead system, but they can also be used for any other suitable application. The kit also includes off-the-shelf plastic DIN Rail mounting adapters and contact blocks that are compatible with the key switch and push button. There are no ventilation spacing limitations on the DIN rail mounting location for these accessories.

# 9. Protection Systems

For systems that provide shutdown functionality, either through direct wiring of relays, recorders, or through the communication of measurements the control system uses to trip, consider the following system aspects:

While the Orbit 60 system has high availability and high reliability when implemented in either a basic simplex or in more complex redundant deployments, Bently Nevada recommends that all applications of the Orbit 60 system for protection follow the guidelines below:

1. Use relays as the Orbit 60 protection output.
2. Monitor the SIM's protection Fault Relay to validate that the system is protecting the machine.
3. Use redundant protection processor modules to allow fault tolerance and system repair if a module fails.
4. Use redundant Power Input Modules (PIM) on each chassis with each PIM wired to separate power supplies using functionally independent external 24 V power sources.
5. Wire sensors on the same location on the shaft to separate input modules (e.g., X probes and Y probes from the same bearing wired to separate input modules).

# 10. API 670 Deployments

This section describes monitoring and protection of a typical API 670 compressor for definition and discussion purposes.

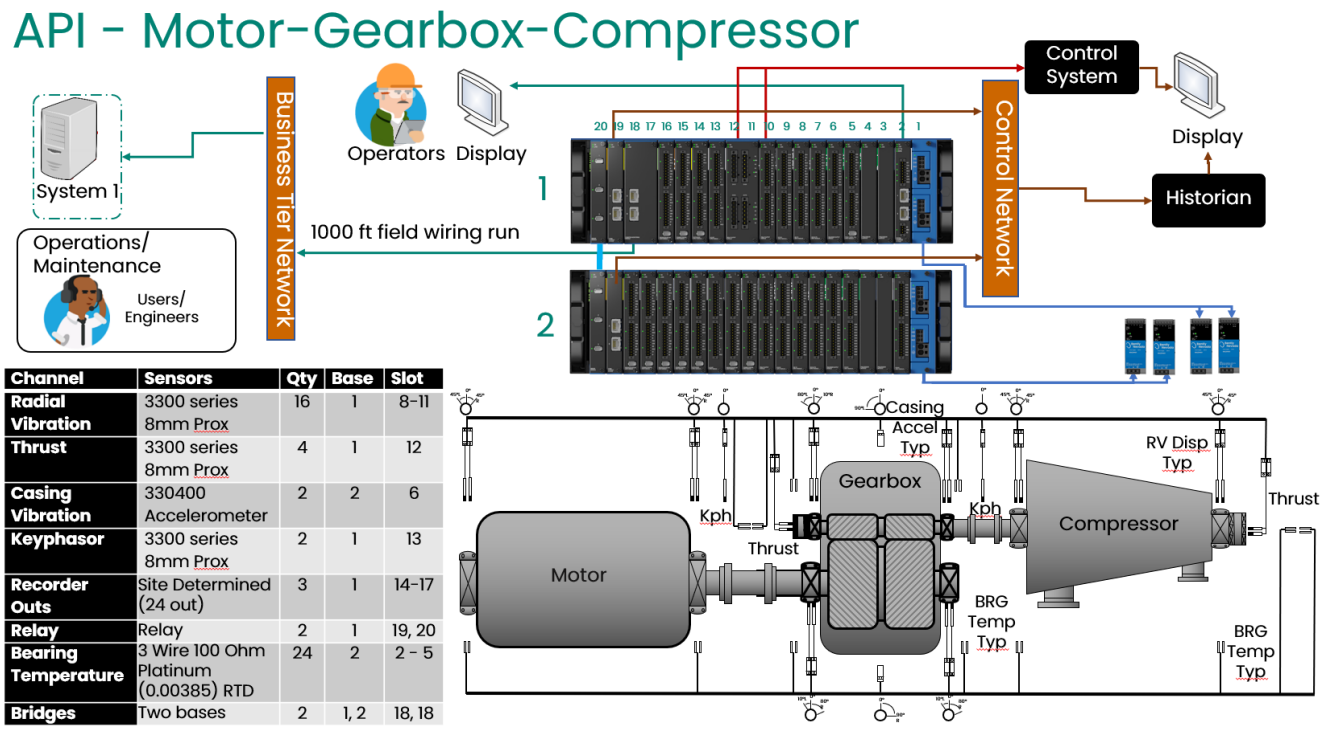


| Channel | Sensors | Qty | Base | Slot |
|---|---|---|---|---|
| Radial Vibration | 3300 series 8mm Prox | 16 | 1 | 8-11 |
| Thrust | 3300 series 8mm Prox | 4 | 1 | 12 |
| Casing Vibration | 330400 Accelerometer | 2 | 2 | 6 |
| Keyphasor | 3300 series 8mm Prox | 2 | 1 | 13 |
| Recorder Outs | Site Determined (24 out) | 3 | 1 | 14-17 |
| Relay | Relay | 2 | 1 | 19, 20 |
| Bearing Temperature | 3 Wire 100 Ohm Platinum (0.00385) RTD | 24 | 2 | 2 - 5 |
| Bridges | Two bases | 2 | 1, 2 | 18, 18 |

**Figure 14: Monitoring and Protection Scheme for Typical API 670 Compressor**

For retrofit installations of API 670 applications, the following installation details are recommended:

1. Two redundant Power Input Modules (PIM).
2. Two redundant, independent 24 V Power Supplies.
3. Redundant Protection Processing Modules (PPM).
4. Electro-Mechanical relay (EMR) (Solid State Relay is also valid, if requested).
5. Connection of protection fault relay.
6. Single machine train and protection group per system.
7. X and Y vibration sensors from a common bearing wired to separate input modules.

# 11. Hazardous Areas

Orbit 60 meets or exceeds the hazardous area classifications of the 3500, but regulatory changes necessitate specific differences in implementation. You must evaluate each hazardous area installation prior to retrofit. The installation allowances and calculations for the 3500 system may not be sufficient to allow the installation of an Orbit 60 in the same manner.

1. **Installations using 3500 internal barrier I/O modules**– If the existing installation uses the 3500 I/O modules with internal barriers, the retrofit scope must include services scope for an entity parameter evaluation of the installed sensors as well as the purchase and installation of external barriers. In release 1 of the product, there are no internal barriers. Physical room for external barrier modules must be provided.
2. **Installations using external barriers or isolators**– If the retrofit currently uses non-BN barriers or isolators, it is recommended to refer to the Orbit 60 input module datasheets to determine the recommended barriers and isolators. Generally, the existing components used for 3500 can be re-used for Orbit 60; however, there are exceptions such as the currently recommended Orbit 60 barrier for RTDs, which requires a different 2-channel barrier.

   Refer to the Orbit 60 Field Wiring Diagram package to review the recommended barrier or isolator wiring details.
3. **Installations that follow the nL (non-incendive) implementation**– These are Hazardous area installations with sensors wired directly to non-internal barrier I/O modules. This method of achieving hazardous area safety is no longer supported outside of North America. An existing nL solution cannot be grandfathered in using an Orbit 60 device. A retrofit of this type of installation must include services scope for a technical evaluation of the installation. There are three primary methods to retrofit these installations:
   - **Use external barriers (ic or ia protection scheme)**
     The specifics of the installation must be evaluated to ensure the chosen barrier meets or exceeds the entity parameters the 3500 installation provided. Appropriate Earthing Ground requires review or modification of the system ground connection capabilities.
   - **Use isolators**
     An external power supply with the capacity to power the isolator is required. Space within the installation for installing the isolators and power supplies is required.
   - **Use nA or Ec protection scheme**
     Field wiring changes are required to meet the specifics of this scheme, including field wiring in conduits, IP54 junction boxes, and so on.

# 12. Field Wiring

Retrofit applications will generally not alter field wiring. Retrofits must interface to the existing transducer wiring rather than using advanced features such as remote I/O bridging solutions.

To avoid future issues with insulation, aging, and terminations leading to sensor signal integrity issues, it is Bently Nevada's recommendation that all field wiring greater than 20 years old be replaced as a part of the retrofit. While the field wiring may be acceptable at the time of the retrofit, the operational life of the Orbit 60 installation will be in excess of 15 years, leading to a total field wiring lifespan of greater than 35 years.

## Field Wiring Retrofit Considerations

### 3500 Internal Terminations

If existing signal wiring was terminated directly at the back of the 3500 I/O modules (i.e. internal terminations) the green 3500 terminal connectors must be removed and replaced with the wiring connectors supplied with the Orbit 60 system.

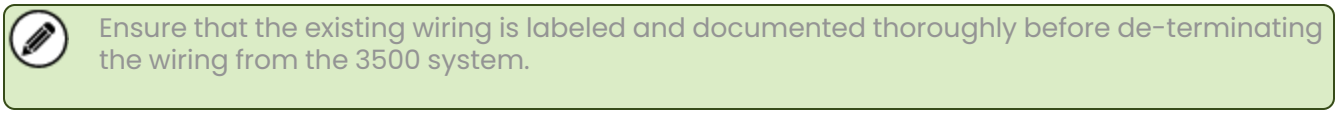


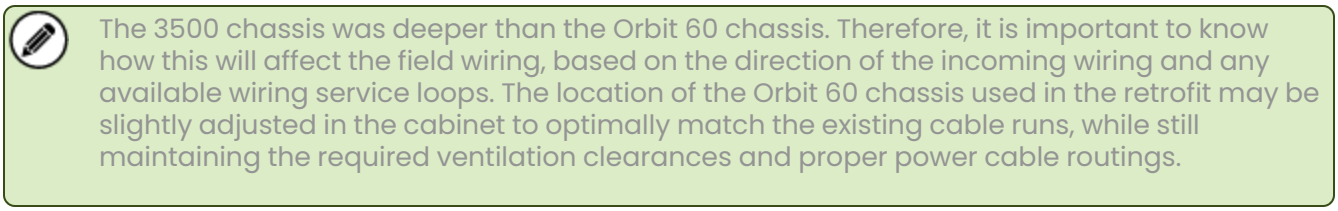


### 3500 External Terminations

If the existing signal wiring is terminated at 3500 External Termination Blocks, it is important to understand that the external termination cables are not directly compatible with the Orbit 60. A future adapter under development will provide a method for interfacing between the existing external termination D-Sub connectors and the Orbit 60 inputs.

Without these special purpose adapters, the user may purchase general D-Sub to "flying lead" cables. The correct D-Sub sizes must be selected to match the size(s) of connectors of the 3500 I/O modules. Then the flying lead conductors must be terminated at the Orbit 60, taking considerable care in making the correct terminations. The wiring layout must ensure that the flying lead conductors are terminated at the appropriate Orbit 60 input pins. To ensure the complete wiring connections are made, refer to the applicable 3500 User Manuals to understand the D-sub output pins used and then cross-reference that information with the Orbit 60 Field Wiring Diagrams to determine where the appropriate conductors must be terminated.

# 13. Transducers

It is Bently Nevada's recommendation that any 3500 installation connected to sensors that are more than 15 years old should have the transducers replaced as part of the upgrade. 3000 series proximitors are not supported within the Orbit 60 platform.

**Table 10: Supported Transducers by Input Module**

| Input Module Type | Supported Transducer Types | Number of Channels |
|---|---|---|
| PAV Negative Dynamic Sampler (Prox, Accel, Velom) | 3-wire (-) Accel<br>3-wire (-) Prox<br>2-wire Velomitor<br>2-wire IEPE | 4 |
| PAS Negative Dynamic Sampler (Prox, Accel, Seismic) | 3-wire (-) Accel<br>3-wire (-) Prox<br>Seismoprobe | 4 |
| PAA Negative Dynamic Sampler (Prox, Accel, Aero) | 3-wire (-) Accel<br>3-wire (-) Prox<br>HTVAS<br>Acceleration Interface Module | 4 |
| PAD Negative Dynamic Sampler (Prox, Accel, DC LVDT) | 3-wire (-) Prox<br>3-wire (-) Accel<br>DC LVDT | 4 |
| PVT Positive Dynamic Sampler (Prox, Accel, Velom) | 3-wire (+) Accel<br>3-wire (+) Prox<br>2-wire IEPE | 4 |
| High Speed Keyphasor (KPH) | 3-wire Accel<br>3-wire Prox<br>Magnetic pickup | 4 |
| AC LVDT Input | 4-wire AC LVDT<br>5-wire AC LVDT | 4 |
| RTD / TC Input | Type J, K, E, T<br>3-wire RTD | 6 |
| Isolated Discrete Input /Process Variable | 4-20 mA<br>-10 V to +10 V<br>Dry/wet contacts | 6 |

Four wire RTDs are not supported in the Orbit 60 system. These devices will have to be wired into Orbit 60 as 3 wire RTDs.

# 14. Glossary of Terms

| | |
|---|---|
| **Accel** | Acceleration |
| **Aero** | Aeroderivative |
| **API** | American Petroleum Institute |
| **BRG** | Bridge |
| **BTO** | Buffered Transducer Output |
| **CE** | Case Expansion |
| **CGW** | Communication Gateway Module |
| **CIDE** | Complementary Input Differential Expansion |
| **CMM** | Condition Monitoring Module |
| **COM** | Common |
| **DCM** | Distributed Condition Monitoring |
| **DCS** | Distributed Control Systems |
| **DR(DE)** | Dual Ramp (Differential Expansion) |
| **EGD** | Ethernet Global Data |
| **ESD** | Emergency Shutdown Device |
| **EIA** | Energy Information Administration |
| **EMR** | electromechanical Relay |
| **HAZLOC** | Hazardous Location |
| **HTVAS** | High Temperature Velocity/Accel Sensor |
| **I/O** | Input/Output |
| **IEPE** | Integrated Electronics Piezo-Electric |
| **ITC** | Isolated Thermocouple |
| **KPH** | High Speed Keyphasor |
| **LVDT** | Linear Variable Differential Transformer |
| **NC** | Normally Closed |
| **NEMA** | National Electrical Manufacturers Association |
| **NO** | Normally Opened |
| **NSSRDE** | Non-Standard Single Ramp Differential Expansion |
| **NTP** | Network Time Protocol |
| **OEM** | Orginal Equipment Manufacturer |
| **PAA** | Prox, Accel, Aero |
| **PAD** | Prox, Accel, Displacement Module |
| **PAS** | Prox, Accel, Seismic |
| **PAV** | Prox, Accel, Velom |
| **PIM** | Power Input Module |
| **PLC** | Programmable Logic Controller |
| **PPM** | Protection Processing Module |
| **Prox** | Proximitor |
| **PVD** | Isolated Process Variable, Discrete Input |
| **PVT** | Positive Voltage Transducer |
| **REB** | Roller Element Bearing |
| **REC** | Recorder Outputs |
| **RMC** | Remote Monitoring Center |
| **RST** | Reset |
| **RTD** | Resistance Temperature Detector |
| **SAI** | System Alarm Inhibit |
| **SCDE** | Single Channel Differential Expansion |
| **SHLD** | Shield |
| **SIL** | Safety Integrity Level |
| **SIM** | System Interface Module |
| **SSR** | Solid State Relay |
| **SSRDE** | Standard Single Ramp Differential Expansion |
| **SW** | Software |
| **TC** | Thermocouple |
| **TLS** | Transport Layer Security |
| **RTD/TC** | Resistance Temp Detector / Thermocouple |
| **TCP/IP** | Transmission Control Protocol Internet Protocol |
| **TM** | Trip Multiply |
| **OEM** | Orginal Equipment Manufacturer |
| **Velom** | Velomitor |

Copyright 2025 Baker Hughes Company. All rights reserved.

Bently Nevada, a Baker Hughes Company

1631 Bently Parkway South, Minden, Nevada USA 89423

https://bntechsupport.com