PRIME Manipulation

Part of the PRIME digital electro-hydraulic intervention technology platform

Features and Benefits

- 30k lbs pull and push capability
- PRIME XR-HST Shifting dog expansion to 5.3 inch
- Interface to hydraulic activated 3rd party shifting tool
- High degree of instrumentation and multiple sensors providing tool and task parameter intelligence
- Real-time monitoring and control of applied force and positioning
- Unlimited number of strokes cycles, with self-locking actuator
- Bi-directional stroke with resolution of +/- 0.04 inches (1 mm)
- Independent stroke and anchor control, with anchor force measurement
- Progressive anchoring force proportional to magnitude of push/pull on completion component
- Electrical feed through on stroker and shifting tool allowing powered tools and/or sensors to be run below
- Highly precise shifting capability due to 1 mm stroke resolution and instrumentation
- Superior maneuverability due to independent anchor control
- Unlimited stroke actuations per run in the well
- High operational efficiency due to electrical feed enabling additional tool/sensor to be run below Stroker and Shifting tool
- Pad anchoring device provides even and reduced pressure on tubing

The PRIME Stroker is the latest component of our new PRIME Technology Platform. Designed for completion manipulation, it incorporates a high degree of instrumentation and multiple sensors providing tool and task parameter intelligence and control along with high-speed telemetry comms for real-time tool task management. The stroker anchors in the casing/tubing and applies bi-directional axial force to the manipulation tool to install, retrieve and manipulate completion components. It is run standalone in vertical wells or in combination with the PowerTrac® PRIME Tractor for conveyance in deviated wells.

Built on the PRIME 2 1/2" OD tool size architecture, the PRIME Stroker comes with an associated extended reach hydraulic shifting tool (XR-HST). This enables passage of the toolstring through small wellbore restrictions when the anchor and shifting tool are retracted, while being able to anchor and engage in larger tubing, sleeve or valve profile dimensions when activated.

Operation and control of the PRIME Tractor, Stroker and XR-HST functions can be done independently and simultaneously, enabling seamless multi-task operations. This is particularly important in highly deviated or horizontal wells. An example sequence could be: activating the shifting tool once at task depth and tractoring down to engage the shifting dogs within the target completion component profile (i.e. in search mode), obtaining positive engagement of the shifting dogs in the profile using the tractor force and verifying this through tool tension measurements, setting the Stroker anchors while maintaining this force then switching the tractor to free rolling mode with arms open to maintain string centralization, and finally commencing the high force stroke in or out sequence to manipulate the targeted completion component.

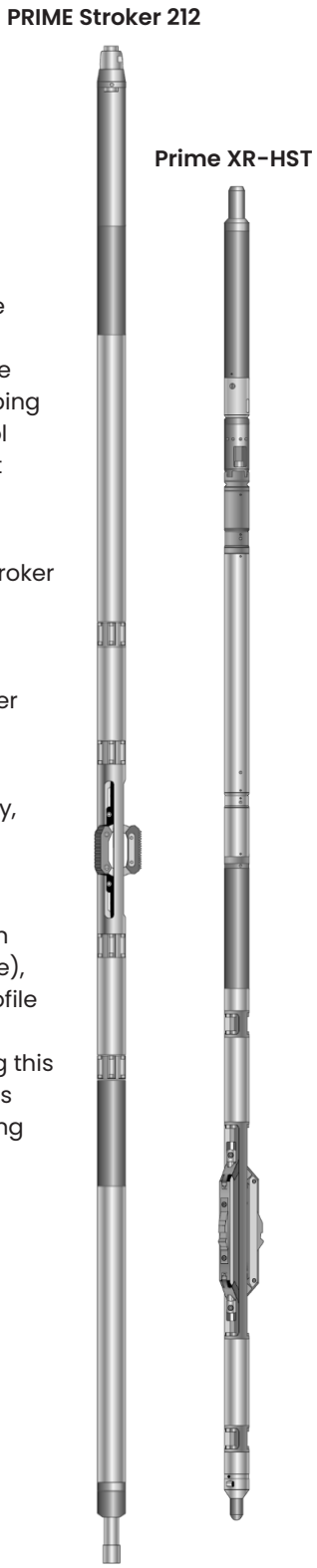

PRIME Stroker 212w

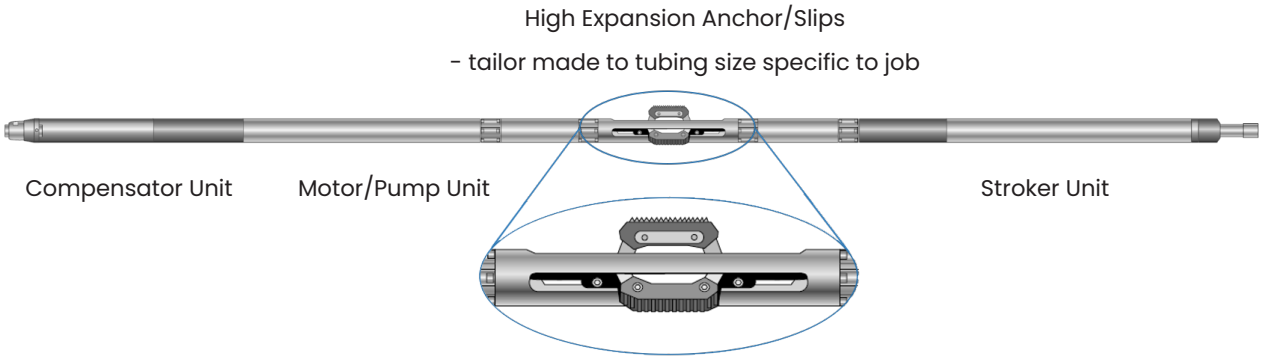

PRIME Extended Reach Hydraulic Shifting Tool (PRIME XR-HST)

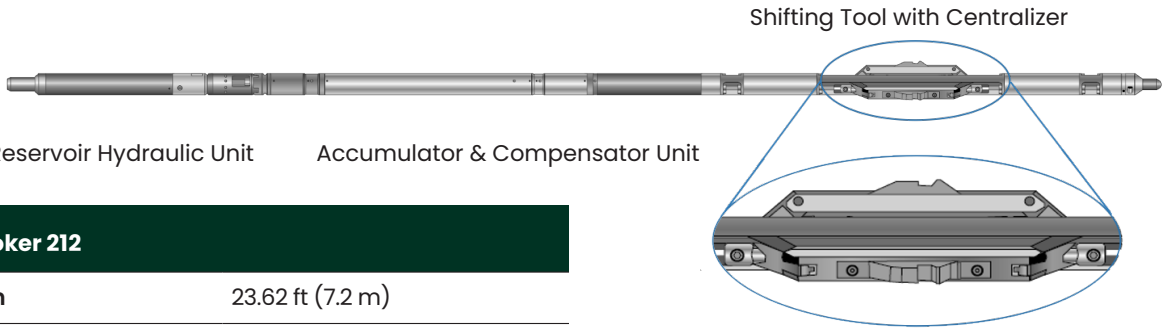

PRIME Stroker 212	
Tool length	23.62 ft (7.2 m)
Tool weight	181 lbs (82 kg)
Tool OD	2.5 in. (63.5 mm) Kit 1: 2.75 in. (69.85 mm) Kit 2: 3.5 in. (88.9 mm) Kit 3: 3.6 in. (91.44 mm) Kit 4: 5 in. (127 mm))
Min setting ID	2.625 in. (66.675 mm) Kit 1: 2.875 in. (73.025 mm) Kit 2: 3.625 in. (92.075 mm) Kit 3. 3.725 in. (94.615 mm) Kit 4: 5.125 in. (130.175 mm)
Max setting ID	4.1 in. (104.140 mm) Kit 1: 4.3 in. (109.22 mm) Kit 2: 5 in. (127 mm) Kit 3: 5.1 in. (129.54 mm) Kit 4: 6.538 in. (166.065 mm)
Max bi-directional force	30,000 lbs (13.6 T)
Stroke length	20 in. (500 mm)
Stroke position resolution	+/- 0.04 in. (+/-1.0 mm)
Electrical feed-through	Yes
Stroke cycle count limit	None
Pressure rating	15,000 psi (1,034 bar)
Temperature rating	350°F (177°C)
Tensile strength	40,000 lbs

PRIME XR-HST	
Tool length	13.5 ft (4.13 m)
Tool weight	183 lbs (83 kg)
Tool body OD	2.5 in. (63.5 mm)
Max shifting dog extension OD	5.56 in. (141.22 mm)
No. of shifting dogs	3
Electric feed-through	Yes
Bi-directional shifting	Yes
Pressure rating	15,000 psi (1,034 bar)
Temperature rating	350°F (177°C)
Max working load shift up	30,000 lbs (13.6 T)
Max working load shift down	15,000 lbs (6.8 T)

Baker Hughes

Copyright 2022 Baker Hughes Company. All rights reserved. 84622

PRIME Release Subsystem

To enable controlled release of stuck toolstrings

Applications

- Logging toolstrings in cased and open hole
- Tractor conveyance and Powered Mechanical Applications

Features and Benefits

- Release energized through wireline or battery
- Extended battery life
- High torque design enabling usage with milling applications
- Real time in-well configuration to adapt for changes in work scope
- Can release even if cable is damaged
- QHSE; reduces personnel exposure to cable breakage at surface due to high overpull
- Improved operational efficiency; less runs, increased measurements per run
- More efficient retrieval/fishing due to clean fishing neck after release

PRIME Release Sub System – The Release Sub System (RSS) has been developed to enable controlled release of stuck toolstrings. Multiple RSS's can be utilized, placed at the top of the toolstring or at relevant positions along its length enabling partial retrieval. The PRIME RSS has integrated PRIME node electronics, enabling full PRIME communication and in-well functionality to PRIME tools positioned below, and in-hole configurability for release parameters. It also provides real-time release status based on sensor reading and battery life measurement.

RSS release is activated by telemetry commands, voltage variation or memory timer mode, enabling controlled release even with damaged cable.

	RSS 218	PRIME RSS 212	RSS 318
Tool body OD	2.125 in. (54.00 mm)	2.5 in. (63.5 mm)	3.125 in. (79.5 mm)
Length	3.7 ft (1.12 m)	3.63 ft (1.104 m)	4.4 ft (1.34 m)
Weight	30.5 lbs (13.8 kg)	49.8 lbs (22.6 kg)	81.1 lbs (37 kg)
Min restriction ID	2.250 in. (57.2 mm)	2.63 in. (66.7 mm)	3.250 in. (82.8 mm)
Pressure rating		15,000 psi (1,034 bar)	
Temperature rating		350°F (177°C)	
Fishing neck	1.38 in. (35.1 mm)	1.75 in. (44.5 mm)	1.75 in. (44.5 mm)
Tensile strength	15,000 lbs (6,800 kg)	50,000 lbs (27,700 kg)	50,000 lbs (27,700 kg)

Copyright 2022 Baker Hughes Company. All rights reserved. 84622