Masoneilan

a Baker Hughes business

84003 Series SteamForm™

Steam Conditioning Control Valve

Installation Guide (Rev. C)



Baker Hughes Data Classification : Public

About this Guide

All information contained herein is believed to be accurate at the time of publication and is subject to change without notice.

Changes to specifications, construction, or components may not result in a revision of this manual unless such changes affect the function or performance of the instrument.

This manual does not guarantee the merchantability of the hardware or software or its suitability for any specific application.

Please report any errors or questions regarding the information in this manual to your local supplier or visit **valves.bakerhughes.com.**

Disclaimer

THESE INSTRUCTIONS PROVIDE THE CUSTOMER/OPERATOR WITH IMPORTANT PROJECT-SPECIFIC REFERENCE INFORMATION IN ADDITION TO STANDARD OPERATION AND MAINTENANCE PROCEDURES. BECAUSE OPERATING AND MAINTENANCE PRACTICES VARY, BAKER HUGHES COMPANY (INCLUDING ITS SUBSIDIARIES AND AFFILIATES) DOES NOT PRESCRIBE SPECIFIC PROCEDURES, INSTEAD, IT DEFINES THE BASIC LIMITATIONS AND REQUIREMENTS ASSOCIATED WITH THE SUPPLIED EQUIPMENT.

THESE INSTRUCTIONS ASSUME THAT PERSONNEL HAVE A GENERAL UNDERSTANDING OF THE SAFE OPERATION OF MECHANICAL AND ELECTRICAL EQUIPMENT IN POTENTIALLY HAZARDOUS ENVIRONMENTS. THEY MUST BE APPLIED IN CONJUNCTION WITH ALL APPLICABLE SITE-SPECIFIC SAFETY RULES, REGULATIONS, AND CODES.

THIS DOCUMENT DOES NOT ATTEMPT TO ADDRESS EVERY DETAIL, VARIATION, OR CONTINGENCY RELATED TO INSTALLATION, OPERATION, OR MAINTENANCE. IF ADDITIONAL INFORMATION IS REQUIRED, OR IF ISSUES ARISE THAT ARE NOT ADEQUATELY COVERED HEREIN, THE MATTER SHOULD BE REFERRED TO BAKER HUGHES.

THE RIGHTS, OBLIGATIONS, AND LIABILITIES OF BAKER HUGHES AND THE CUSTOMER/OPERATOR ARE STRICTLY LIMITED TO THOSE EXPRESSLY STATED IN THE APPLICABLE SUPPLY CONTRACT. NO ADDITIONAL REPRESENTATIONS OR WARRANTIES, EXPRESS OR IMPLIED, ARE PROVIDED BY THE ISSUANCE OF THIS DOCUMENT.

THIS DOCUMENT IS PROVIDED SOLELY TO ASSIST WITH THE INSTALLATION, TESTING, OPERATION, AND MAINTENANCE OF THE EQUIPMENT DESCRIBED AND MAY NOT BE REPRODUCED, IN WHOLE OR IN PART, WITHOUT PRIOR WRITTEN AUTHORIZATION FROM BAKER HUGHES.

Document Changes

Version/Date	Changes
Rev.A - 05/2015	Original Release
Rev.B - 11/2020	Baker Hughes Rebranding
Rev.C - 09/2026	Added Additional Application Context and Product Scope
	Expanded Documentation and Reference Materials
	Updated System Layout Illustrations
	Added Orientation Options and Additional System Options
	Updated Installation Tooling Design
	Updated Field Installation Recommendations

Copyright 2026 Baker Hughes Company. All rights reserved.

Contents

Masoneilan 84003 Series SteamForm Installation 1
- Supporting Documentation 1
- Project-Specific Documents 1
- Reference Manuals and Technical Documents 1

Piping System Layout 2
- Upstream Pipe Recommendations 3
- Downstream Pipe Recommendations 3
  - Temperature Sensor Recommendations 3
  - Pressure Sensor Recommendations 3
  - Pipe Size and Selection 3
  - Material Break Point 4
  - Piping Material Transition Recommendations 4

Spray Water System Requirements 5
- Water Pressure 6
- Water Temperature 7
- Strainers 8

Valve Installation 8
- Valve Support 8
- Valve Orientation 8
  - Inlet, Outlet, and Spray-Water Connection Orientations 9
- Actuator Support for Horizontally Installed Valves 13
- Drains and Pipe Slopes 13
- Seat Bypass Systems (Warm-Up and Preheating Steam) 14

Insulation 15
- Accessibility 15

Temperature Control Methods 15
- Temperature – Feedback Control 15
- Temperature – Feedforward Control 16
- Response Time and Speed 16

Start-Up and Commissioning 16
- Trim Installation Device (TID) 18
- Post Weld Heat Treatment and Hydro-Testing 19
- SteamForm Assembly 19
- Commissioning Spares 19

Bypass Applications 20
- Process Control 20
- Back-Pressure Dump Tubes 20
- System Noise Evaluation 21

Final Recommendations 21

Copyright 2026 Baker Hughes Company. All rights reserved.

Table of Figures

Figure 1
Typical Steam Conditioning System 2

Figure 2
Evaporation Process of Water Droplet 4

Figure 3
Examples of Acceptable Orientations for 84003 Valve Configurations 9

Figure 4
Optional Inlet, Outlet, and Spray-Water Connection Orientations, Angle FTC 11

Figure 5
Optional Inlet, Outlet, and Spray-Water Connection Orientations, Angle FTO 12

Figure 6
Optional Inlet, Outlet, and Spray-Water Connection Orientations, Globe 12

Figure 7
Optional Inlet, Outlet Connection Orientations, Angle No Desuperheater 12

Figure 8
Example of Insulation Installed Around 84003 SteamForm 15

Figure 9
Example of Custom Masoneilan High Speed Actuator 16

Copyright 2026 Baker Hughes Company. All rights reserved.

Masoneilan 84003 Series SteamForm Installation

Installation of the **Masoneilan™ 84003 Series SteamForm™** requires a clear understanding of the surrounding operating environment. Product selection and evaluation should consider both upstream and downstream conditions to ensure the system is properly designed for reliable, long-term operation. Baker Hughes installation guidelines provide recommendations and cautions for various elements of steam conditioning system design.

Masoneilan 84003 Series valves are custom engineered and supported by a dedicated engineered products team. This team supports engineered projects through the lifecycle, right from initial quotation through manufacturing and field installation support. Special technical attention is required to deliver efficient, application-specific solutions, particularly for steam conditioning services.

Supporting Documentation

The 84003 SteamForm product line includes a wide range of design configurations and optional features, requiring project-specific documentation in addition to standard technical manuals and specifications. A summary of both project-specific and general documents is following sections:

Project-Specific Documents

- **Spec Sheet (Data Sheet):** Key design details including sizes/ratings, materials, configuration, operating/design conditions, trim/actuation, and notes. (Generated using Masoneilan powerful and proven sizing software **ValvStream™**).
- **Preliminary Quote Drawing:** Preliminary overall dimensions and weight.
- **General Arrangement (GA) Drawing/Certified Print:** Final dimensions and interface details, including connection information, materials, weight, and center of gravity. All drawings are revision-controlled in Masoneilan's Global PLM system and GA (Certified Print) approval establishes the design freeze post-freeze changes may require a change order and could impact delivery.
- **Assembly Drawing:** Bill of materials (BOM), cross-section, and bolting torque requirements.
- **Optional/Upon Request:** Allowable piping load data (with optional FEA report), flow curves/Cv vs. travel (optional DCS polynomial), commissioning kit and installation tooling drawings, actuation drawings (wiring/pneumatic schematics), and other project-specific documentation (e.g., weld maps, hardness maps, custom formats, calculations/engineering analysis).

Reference Manuals and Technical Documents

- **Masoneilan 84003 SteamForm Installation Guide:** Installation recommendations and cautions for SteamForm valves. (This guide)
- **Masoneilan 84003 SteamForm Tech Spec:** Available options for valve/trim configurations, optional materials, pressure/temperature limits, and connection types. (BHMN-84003-SteamForm-TS-33830A-0521)
- **Masoneilan 84003 SteamForm Instruction & Operating Manual (IOM):** Valve assembly/disassembly, maintenance/inspection, commissioning components, bolt torque sequences/values, and spare parts recommendations. (BHMN-84003-IOM-31013C-X-0620)
- **Masoneilan 84003 SteamForm Brochure:** Design features and key technical differentiators based on installed experience. (BHMN-SteamForm-BR-19358D-0924)
- **Masoneilan 84003 SteamForm Trim Installation Guide:** Step-by-step trim installation procedure using Masoneilan's installation cradle for horizontal valve bodies. (BHMN-84003-SteamForm-Tool-IOM-34634A-0524)
- **Masoneilan DSH Desuperheater Fact Sheet:** General information on Masoneilan desuperheating systems. (Reference BHMN-DSH-FS-34696B)
- **Masoneilan Desuperheating Systems Brochure:** Desuperheating technology overview, including nozzle design details. (Reference BHMN-DSH-BR-34692C-0724)
- **Masoneilan DSH Desuperheater Tech Spec:** Configuration options, materials, pressure/temperature limits, connection types, flow characteristics, and spray water recommendations. (Reference BHMN-DSH-TS-33466D-0724)
- **Masoneilan DSH Desuperheater Manual (IOM):** Installation, inspection, maintenance, system requirements, and commissioning considerations for DSH units. (Reference BHMN-DSH-IOM-33464C-0824)
- **Masoneilan Steam Conditioning Valves and Desuperheaters White Paper:** Detailed explanation of spray nozzle technology and the benefits of Masoneilan flow profiler technology. (Reference BHMN-Attemperators-WP-34709A-0824)

Copyright 2026 Baker Hughes Company. All rights reserved.

Piping System Layout

Installation of Masoneilan 84003 Series SteamForm products requires a clear understanding of the operating environment and process conditions. Product selection must consider upstream and downstream requirements to ensure reliable and long-term performance. Masoneilan steam conditioning valves are custom engineered for each application, offering flexible design options to accommodate a wide range of service conditions and piping configurations.

Baker Hughes installation guidelines provide recommendations for critical steam conditioning system design elements based on extensive installed experience and proven field practices. Proper piping design is essential to performance and reliability. Correct pipe sizing, appropriate upstream, and downstream arrangements, and proper placement of control and sensing elements are required to achieve stable and accurate temperature control.

Figure 1 illustrates a typical steam conditioning application. It depicts the recommended upstream and downstream piping lengths along with the temperature and pressure sensor locations discussed in the following sections.

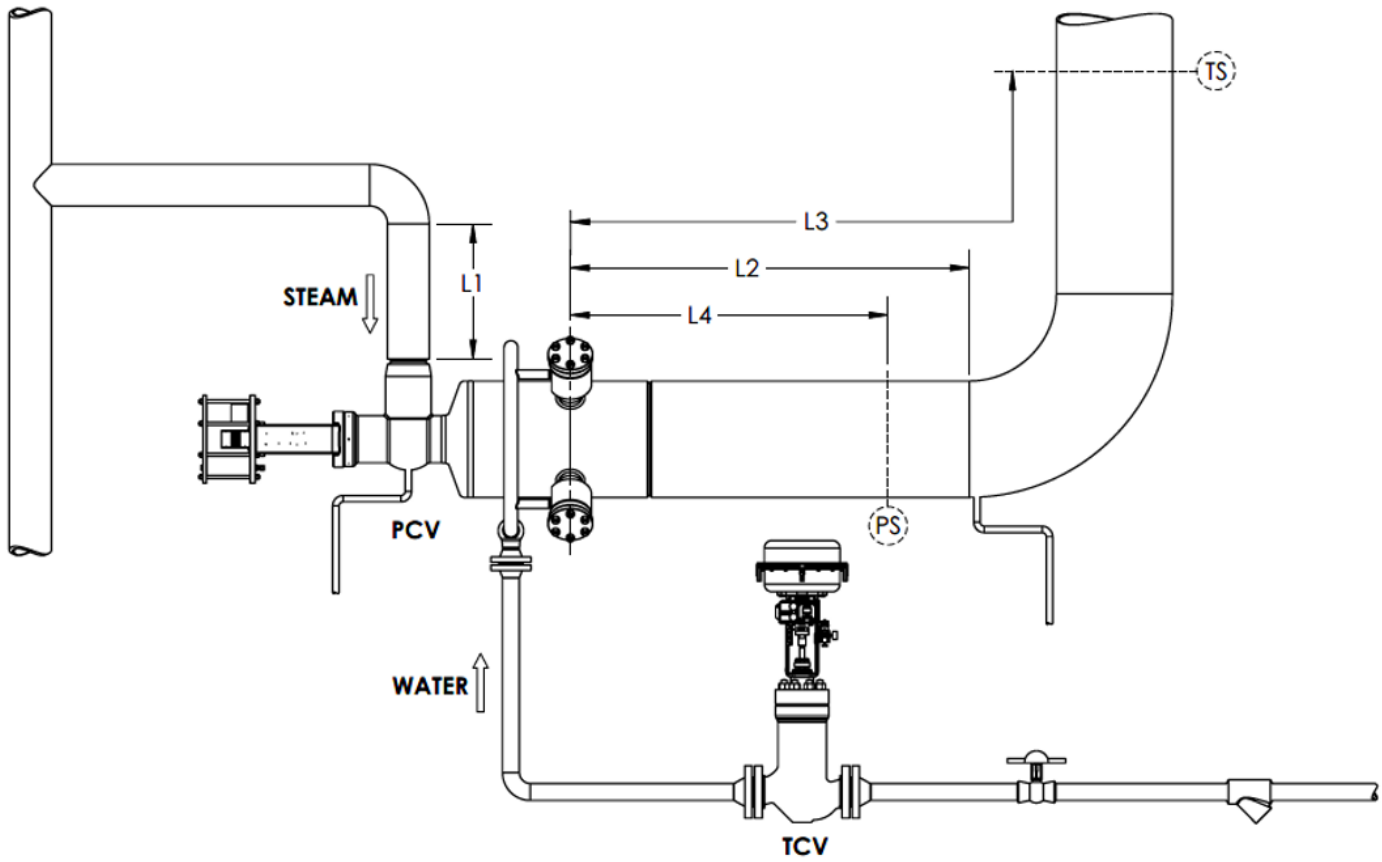

Figure 1. Typical Steam Conditioning System

Copyright 2026 Baker Hughes Company. All rights reserved.

Upstream Pipe Recommendations

Adjacent pipe bends (such as elbows and tee connections) installed near the valve body can introduce rotational forces and vibration. Prolonged flow-induced vibration may cause internal damage, increased noise, and premature failure of instrumentation components.

To reduce these risks, a stable flow profile must be established upstream of the SteamForm valve by providing an adequate length of straight pipe. Upstream tee connections create additional turbulence and therefore require longer straight pipe lengths. Consult Baker Hughes for application-specific recommendations.

Minimum upstream straight pipe length:

L1 = 5 × Nominal Pipe Diameter

Downstream Pipe Recommendations

Downstream piping design is more complex due to spray water injection and steam expansion and must be carefully configured to avoid erosion, poor mixing, and unstable temperature control. A sufficient length of straight pipe downstream of the SteamForm valve is required to allow injected water droplets to fully vaporize before reaching an elbow. If this length is inadequate, water can impinge on the elbow, causing increased noise, erosion, poor mixing, water fallout, and thermal fatigue in the piping. Although elbows should not be installed too close to the valve outlet, they are recommended beyond the minimum straight pipe length to promote turbulence and improve spray water mixing. Long-radius chrome-moly elbows are preferred to enhance erosion resistance.

Minimum downstream straight pipe length:

L2 = Greater of:

- 10 ft (3 m) or
- 7 × Nominal Pipe Diameter

Temperature Sensor Recommendations

The temperature sensor must be located far enough downstream to ensure complete water vaporization, single-phase steam flow, and uniform mixing of steam and spray water. Wet steam, undeveloped flow, or improper placement can cause the sensor to detect sub-saturated conditions, reduce spray water injection, and result in unstable or uncontrollable operation.

Sensor location is application-specific and depends on piping layout and operating conditions, which should be reviewed with a Baker Hughes representative. In general, sensors should be installed in the middle to upper portion of the pipe cross-section and at least five (5) pipe diameters downstream of any elbow to avoid errors from water fallout and poor temperature control. If adequate straight-run distance cannot be provided, a feed-forward temperature control strategy may required. (see temperature control methods later in this document).

Minimum temperature sensor distance:

L3 = 33 ft (10 m)

Pressure Sensor Recommendations

Flow through valves, elbows, and tees can create low-pressure pockets and eddies that induce vibration and cause inaccurate pressure readings. Pressure sensors should therefore be installed in locations where stable, uniform, and fully developed flow exists. Sensor type and redundancy are the responsibility of the end user, as they are part of the control system design and outside the valve scope.

Minimum pressure sensor distance:

L4 = 5 × Nominal Pipe Diameter downstream of the valve and any elbows

Pipe Size and Selection

Pipe size selection is governed by velocity limits defined by customer or engineering standards. For steam conditioning applications, optimal performance is typically achieved at steam velocities of 250–300 ft/s (76–91 m/s). Higher velocities improve droplet shear and breakup, promoting rapid evaporation, while lower velocities reduce entrainment and increase the risk of water fallout and unstable temperature control.

Pipe sizing should be based on the most critical or sustained operating conditions, balancing occasional high velocities with acceptable turndown at low flow. Because effective cooling does not occur immediately at the valve outlet, downstream piping materials and wall thickness must be designed to withstand the full upstream steam temperature.

Copyright 2026 Baker Hughes Company. All rights reserved.

Material Break Point

As previously noted, temperature reduction does not occur immediately at the SteamForm outlet. Injected spray water must first heat to its saturation temperature and then evaporate into steam before effective cooling occurs. When temperature reduction is a critical design requirement, the material break point is application-specific and cannot be defined by a simple rule of thumb. Evaporation distance depends on several interacting variables:

- Enthalpy difference, between the injected water and its saturation point, which determines the heating time (t_1).
- Droplet diameter, governed by nozzle design and injection velocity, which influences the evaporation time (t_2).
- Steam velocity, which determines the required evaporation length, calculated as steam velocity multiplied by (t_1 + t_2).

Because these variables are interdependent and applied through indirect relationships, accurate determination requires application-specific analysis.

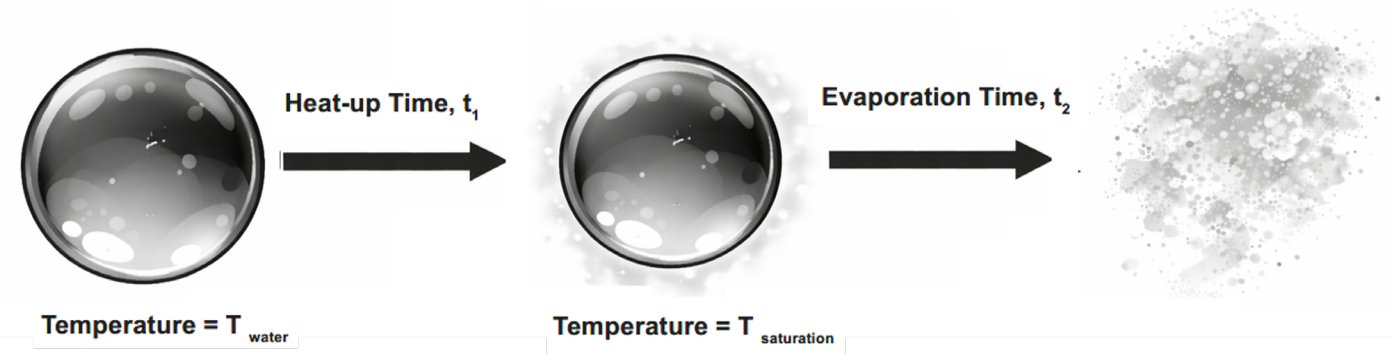

Figure 2. Evaporation Process of Water Droplet

Warning: Steam exiting the SteamForm valve exhibits high temperature. Complete cooling of the steam temperature does not occur until the spray water evaporates and mixes with the steam. Therefore, the final outlet set point is not achieved until reaching the factory specified temperature sensor location.

Piping Material Transition Recommendations

Temperature reduction does not occur immediately at the SteamForm outlet, as injected spray water must first heat to saturation and fully evaporate before effective cooling occurs. Steam exiting the valve therefore remains at elevated temperature until complete evaporation and mixing are achieved, with the final outlet temperature not realized until the specified temperature sensor location.

Material transition points (“carbon break”) are application-specific and depend on evaporation time, droplet size, and steam velocity. SteamForm valves are typically manufactured from high-alloy materials (e.g., Grade 91) for high-temperature service, while downstream piping is often lower-grade material for cost optimization. Because lower-grade materials cannot withstand full upstream temperatures, minimum downstream distances must be met before transitioning materials. For applications requiring temperature reduction prior to a material downgrade, the factory or a Baker Hughes representative should be consulted for evaluation and minimum distance recommendations.

Copyright 2026 Baker Hughes Company. All rights reserved.

Spray Water System Requirements

Spray water source selection directly impacts system turndown, performance, and operating cost. Adequate pressure differential between the spray water supply and outlet steam is essential for proper atomization and nozzle operating range. Low-pressure water sources significantly limit turndown and overall system performance, regardless of upstream equipment.

When selecting a spray water source, tradeoffs between performance and cost, such as adding a pump versus using low-pressure water, must be evaluated. The design objective is to provide a clean water source with sufficient pressure and flow to achieve the required system turndown while minimizing operating cost. Additional guidelines are provided in the following sections.

Masoneilan offers several types of spray water valves—commonly referred to as Temperature Control Valves (TCVs)—to best match application requirements for spray capacity and optimal turndown. Products such as the Masoneilan **21000 Series**, **41005 Series**, and **18X00/78X00 LincolnLog™ Series** provide a strong performance portfolio to meet the needs of most spray-water systems. For additional information on these valve offerings, consult Baker Hughes engineering through the appropriate channel partner or sales representative.

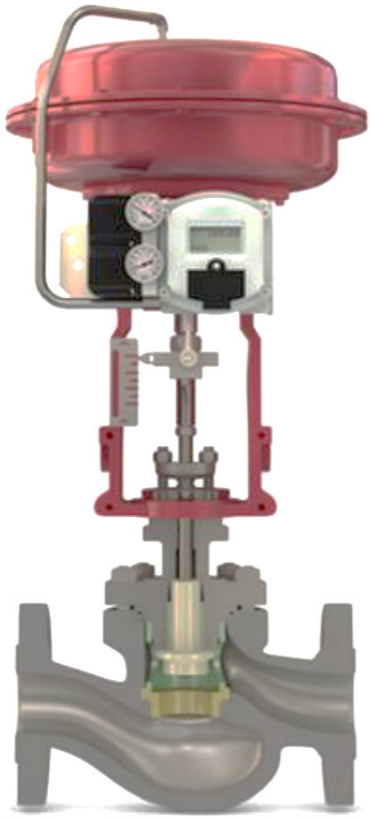

21000 Series

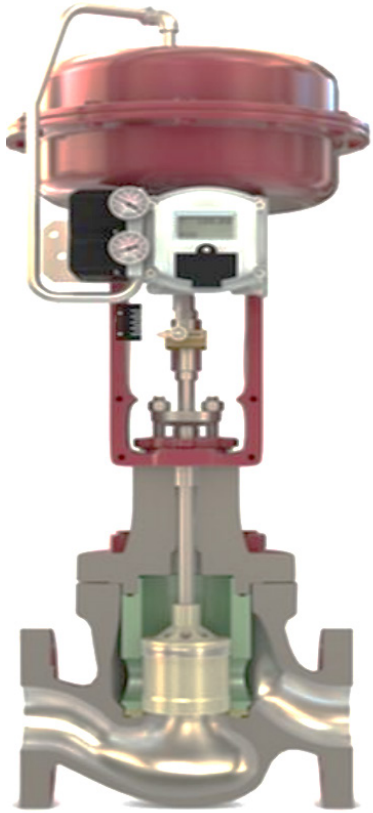

41005 Series

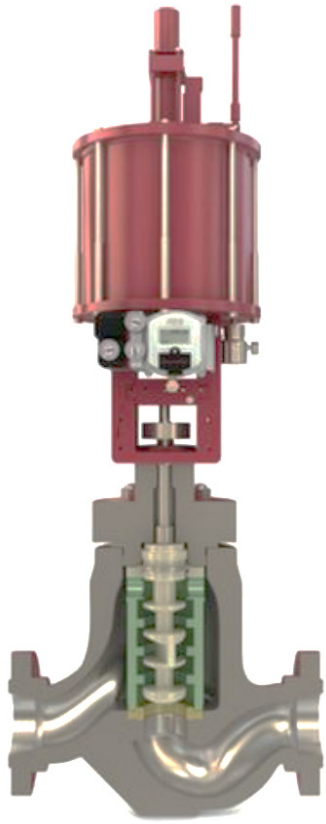

LincolnLog Series

Copyright 2026 Baker Hughes Company. All rights reserved.

Water Pressure

Adequate spray water differential pressure across both the control valve and spray nozzle is essential for proper atomization and effective cooling. Insufficient pressure produces larger droplets, poor atomization, increased water fallout, and unstable performance. Low-pressure water sources often require larger or additional nozzles and control valves, increasing system complexity and severely limiting low-flow turndown.

For new designs, a high-pressure, high-flow source, such as a boiler feed pump or a properly sized condensate pump is recommended. A pressure margin of **≥ 150 psi (11.5 bar)** above outlet steam pressure provides optimal atomization and operating range, lower differentials may be acceptable but reduce turndown. Spray water experiences two pressure drops: first across the control valve and then across the spray nozzle. Each nozzle has a minimum effective differential pressure, typically **20–45 psi (1.4–3.1 bar)** depending on design, below which atomization degrades. Once this minimum is met, additional differential pressure increases nozzle capacity and directly expands system turndown. Excess pressure is absorbed by the control valve and is generally not a limiting factor.

The available pressure differential above the minimum effective limit determines the turndown range of the spray nozzle. The following example illustrates this relationship. Assume a spray nozzle with **Cv = 1.0** and water with a **specific gravity of 1.0**. Two operating scenarios are compared: one with an available pressure differential of **400 psi,** and another with **100 psi.** In both cases, the nozzle minimum effective differential pressure is **25 psi.** The flow coefficient (Cv) for an incompressible fluid such as water is calculated using the following equation:

$$C_v = Q\sqrt{\frac{SG}{\Delta P}}$$

This can be rearranged to calculate the volume flow rate, Q (GPM):

$$Q = C_v\sqrt{\frac{\Delta P}{SG}}$$

Scenario 1: 4:1 Turndown Application

$$Q_{max} = 1.0\sqrt{\frac{400}{1.0}} \qquad Q_{min} = 1.0\sqrt{\frac{25}{1.0}}$$

$$Q_{max} = 20\ GPM \qquad Q_{min} = 5\ GPM$$

$$Q_{max} = 1.0\sqrt{\frac{400}{1.0}} \qquad Q_{min} = 1.0\sqrt{\frac{25}{1.0}}$$

$$Q_{max} = 10\ GPM \qquad Q_{min} = 5\ GPM$$

Copyright 2026 Baker Hughes Company. All rights reserved.

Water Temperature

Masoneilan sizing tools and enthalpy balance calculations are used to optimize valve and nozzle selection for spray water conditions. Cold water requires lower mass flow but longer evaporation length, while hot water evaporates faster and reduces thermal shock but may flash at low pressure. Typical spray water temperatures range from ambient to **300°F (150°C)**, higher temperatures may be considered provided the water remains in the liquid phase. Masoneilan does not offer steam-assisted desuperheating systems.

The temperature of the spray water source directly affects the amount of water required to achieve a specified outlet steam temperature. Water temperature also influences the required downstream pipe length and overall evaporation efficiency. Colder water sources, such as condensate or makeup water, require less mass flow to cool the steam to the target set point.

The required spray water flow rate is determined using a heat balance calculation, shown in the formula below. This calculation balances the heat entering the valve from the inlet steam and spray water with the heat exiting the valve as conditioned outlet steam.

$$w1H1 + w2H2 = w3H3$$

$$w1H1 + w2H2 = (w1 + w2)H3$$

$$w2 = w1\left[\frac{H1 - H3}{H3 - H2}\right]$$

Where:
w = mass flow rate
H = enthalpy (btu/lb or kJ/kg)

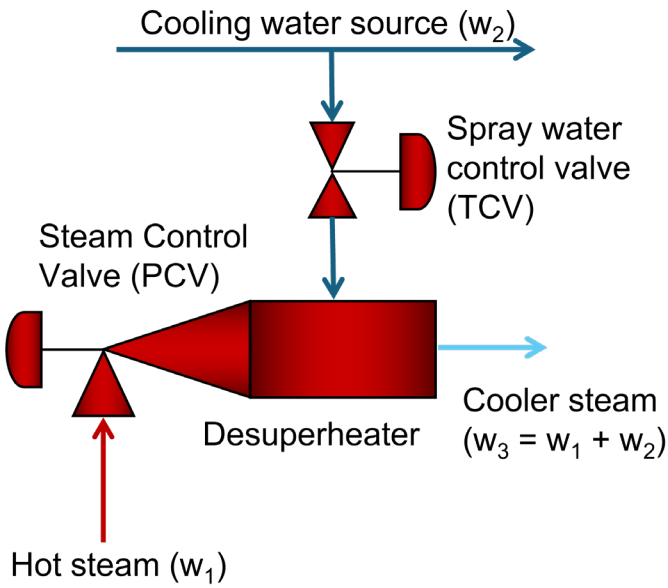

Hot spray water, such as boiler feedwater, requires a higher flow rate but evaporates more quickly because less heat transfer is needed to reach saturation. Higher water temperature also reduces thermal shock by minimizing the temperature difference between the steam and spray water. In most applications, hot water is advantageous for steam conditioning, as it reduces downstream piping requirements and helps limit water fallout.

In low-pressure steam applications, however, hot water may flash as pressure is reduced across the control valve or nozzle orifice. If flashing occurs upstream of the nozzle, special valve trim is required to protect equipment and extend service life. If flashing occurs at injection into the outlet piping, it can be beneficial by enhancing evaporation and mixing. Spray water temperature is typically a fixed design condition, but its effects must be fully considered so the system can be properly designed for the application.

Copyright 2026 Baker Hughes Company. All rights reserved.

Strainers

To prevent damage or blockage of Masoneilan spray nozzles, an inline mesh strainer is strongly recommended upstream of the spray water control valve. The SteamForm spray water injection system uses a range of nozzle types and sizes, including flat spray, hollow-cone, and variable-orifice designs are selected based on required water flow and available pressure differential. Each nozzle produces a specific spray pattern and droplet size that directly affects system performance.

Because these nozzles contain small orifices, they are susceptible to blockage from scale, debris, or other particulates, regardless of water quality. Refer to the table below for the recommended strainer screen size for each nozzle size.

Nozzle Cv	Strainer Mesh Size
0.01-0.25	200
0.4	200
0.8	200
1.5	100
3	100
5	100
10	50

⚠WARNING

Failure to install a strainer can result in blockage of the nozzle, damage to heat sensitive equipment, and plant shutdown.

Valve Installation

Valve Support

Steam conditioning valves must be properly supported and accessible for maintenance, with adequate clearance for trim removal and appropriate lifting provisions, especially for horizontally installed valves where access is more challenging. Valves should be supported by the piping system and not rigidly attached to building or grating structures, as thermal expansion in steam piping can impose excessive stresses if the system is over constrained.

The complete piping system, including thermal and pressure loads, must be evaluated by qualified piping engineers. While Baker Hughes does not design piping or supports, valve-specific data such as weight and allowable forces and moments are provided to support proper piping design and should be reviewed during installation.

Proper installation and accessibility are critical to maximizing valve service life and plant reliability. When correctly applied, steam conditioning valves protect downstream equipment, support safe startup, and maintain operation during load transients. Adhering to recommended installation practices helps minimize maintenance issues and extend valve life.

Valve Orientation

The preferred SteamForm valve orientation for maintainability and long service life is a vertical installation, with the actuator and stem oriented vertically. This arrangement minimizes the potential for side loading of trim components and valve/actuator stems, and it supports a “top-entry” design that simplifies maintenance.

Although a vertical actuator orientation is ideal, steam conditioning valves are commonly installed horizontally (horizontal stem), particularly in turbine bypass applications. This configuration can introduce challenges related to trim alignment, condensate management, and maintenance access. Masoneilan valves are specifically engineered to accommodate these installations through heavily guided trim, advanced hard-facing technology, and service-friendly designs.

Horizontally installed valve/actuator configurations are limited to angle, flow-to-close (FTC) valves only. Globe valves and flow-to-open (FTO) valves must be installed with the valve and actuator stem in a vertical orientation. Refer to Figure 3 for acceptable orientations. Vertical upward outlet configurations should be avoided, as they complicate trim removal and allow the valve body to act as a condensate trap, increasing the risk of water accumulation, erosion, and reduced valve life.

Copyright 2026 Baker Hughes Company. All rights reserved.

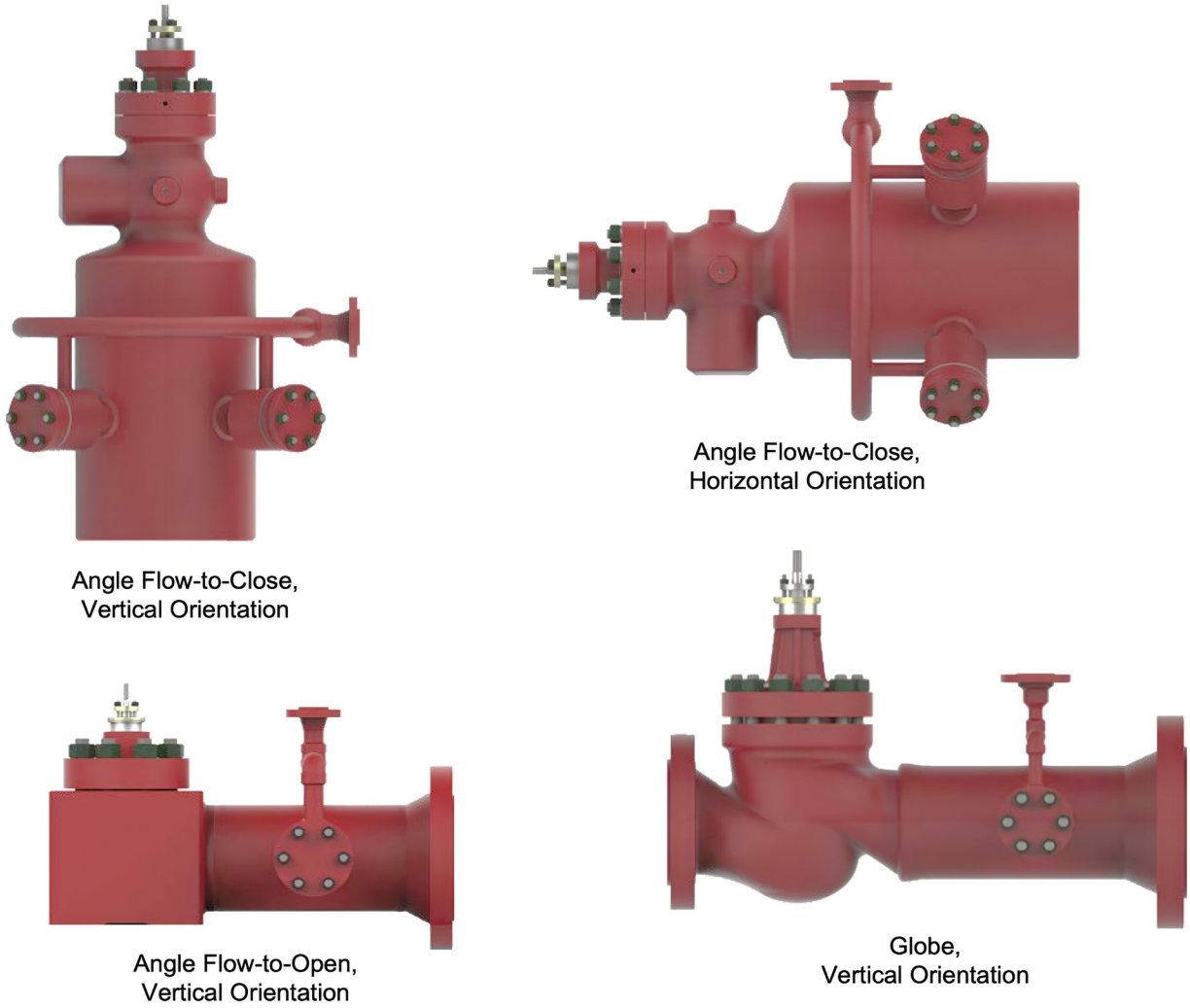

Figure 3. Examples of Acceptable Orientations for 84003 Valve Configurations

Inlet, Outlet, and Spray-Water Connection Orientations

Special consideration must be given not only to the valve and actuator orientation, but also to the inlet, outlet, and spray-water connection points on the valve and desuperheater. Establishing these connection orientations early in the engineering phase is critical to ensure proper drainage is incorporated into the design and that adequate clearance is provided between piping connections.

Masoneilan defines standard installation options for body subassemblies (valve without actuator), illustrating bonnet position as well as steam and spray-water flow directions. These options are listed in the table below and are supported by individual isometric sketches showing each orientation relative to the ground surface ( ). The tables help confirm connection locations early in the design process, ensuring installation requirements are captured up front and that any necessary design features are identified based on the selected orientation. The available configurations cover angle flow-to-close valves in both vertical and horizontal orientations, angle flow-to-open valves, globe valves, and 84003 valve bodies without a desuperheater section (such as shutoff valve applications). Installations outside of these standard options may be possible but require consultation with Baker Hughes engineering through the appropriate channel partner or sales representative.

Copyright 2026 Baker Hughes Company. All rights reserved.

Inlet, Outlet and Spray-Water Connection Orientation Matrix

Orientation Option	Type	With Desuperheater Section	Actuator Installation	Inlet Position When Facing Downstream	Water Connection When Facing Downstream
1	Angle	No	Vertical	-	-
2	Angle	No	Horizontal	Down	-
3	Angle	No	Horizontal	Left	-
4	Angle	No	Horizontal	Up	-
5	Angle	No	Horizontal	Right	-
a	Globe	Yes	Vertical	-	Up
b	Globe	Yes	Vertical	-	Right
c	Globe	Yes	Vertical	-	Down
d	Globe	Yes	Vertical	-	Left
1a	Angle	Yes	Vertical	-	Opposite Inlet
1b	Angle	Yes	Vertical	-	Right
1c	Angle	Yes	Vertical	-	Same Side as Inlet
1d	Angle	Yes	Vertical	-	Left
2a	Angle	Yes	Horizontal	Down	Opposite Inlet
2b	Angle	Yes	Horizontal	Down	Right
2c	Angle	Yes	Horizontal	Down	Same Side as Inlet
2d	Angle	Yes	Horizontal	Down	Left
3a	Angle	Yes	Horizontal	Left	Right
3b	Angle	Yes	Horizontal	Left	Down
3c	Angle	Yes	Horizontal	Left	Same Side as Inlet
3d	Angle	Yes	Horizontal	Left	Up
4a	Angle	Yes	Horizontal	Up	Opposite Inlet
4b	Angle	Yes	Horizontal	Up	Left
4c	Angle	Yes	Horizontal	Up	Same Side as Inlet
4d	Angle	Yes	Horizontal	Up	Right
5a	Angle	Yes	Horizontal	Right	Opposite Inlet
5b	Angle	Yes	Horizontal	Right	Up
5c	Angle	Yes	Horizontal	Right	Same Side as Inlet
5d	Angle	Yes	Horizontal	Right	Down

Copyright 2026 Baker Hughes Company. All rights reserved.

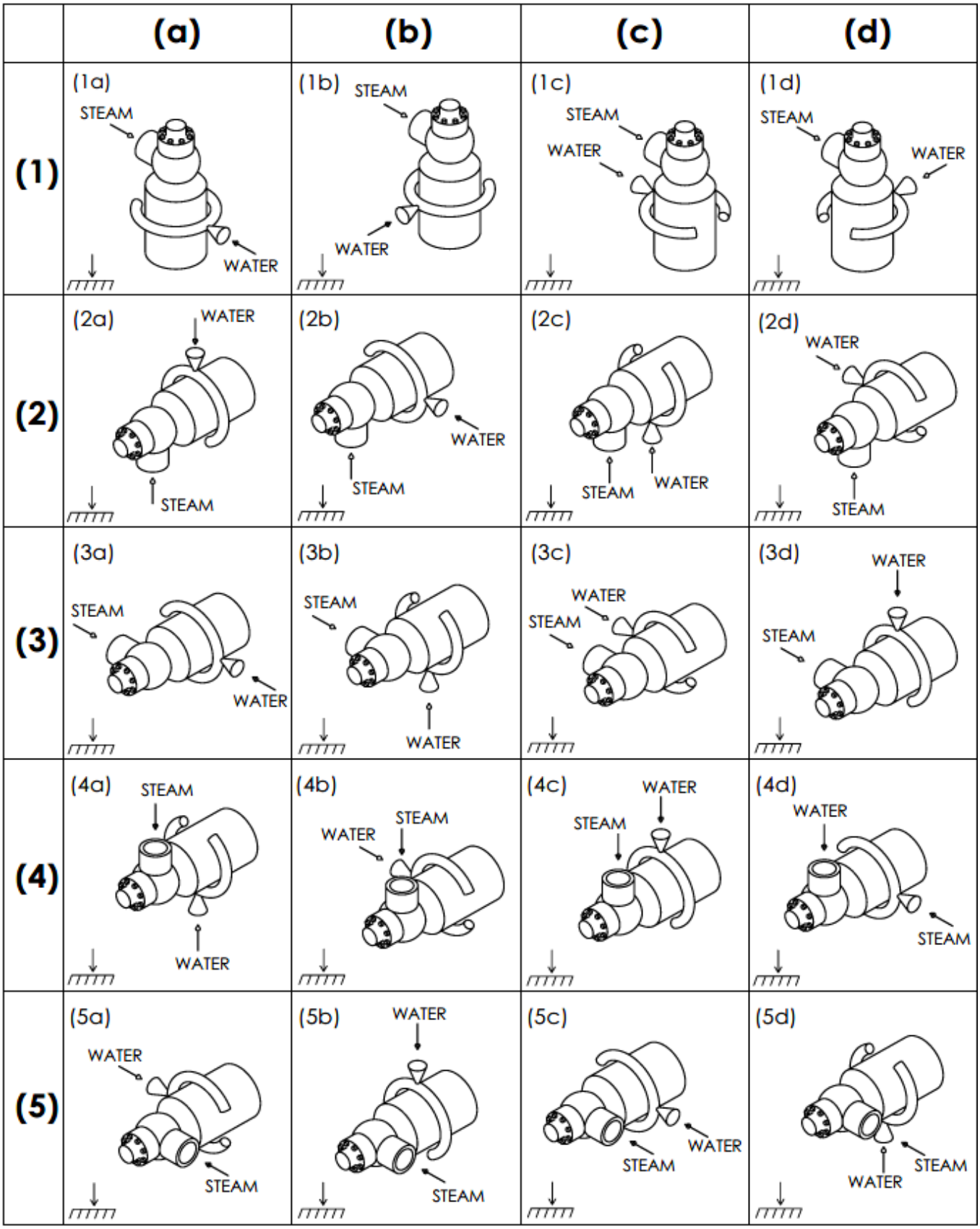

Figure 4. Optional Inlet, Outlet, and Spray-Water Connection Orientations, Angle FTC

Copyright 2026 Baker Hughes Company. All rights reserved.

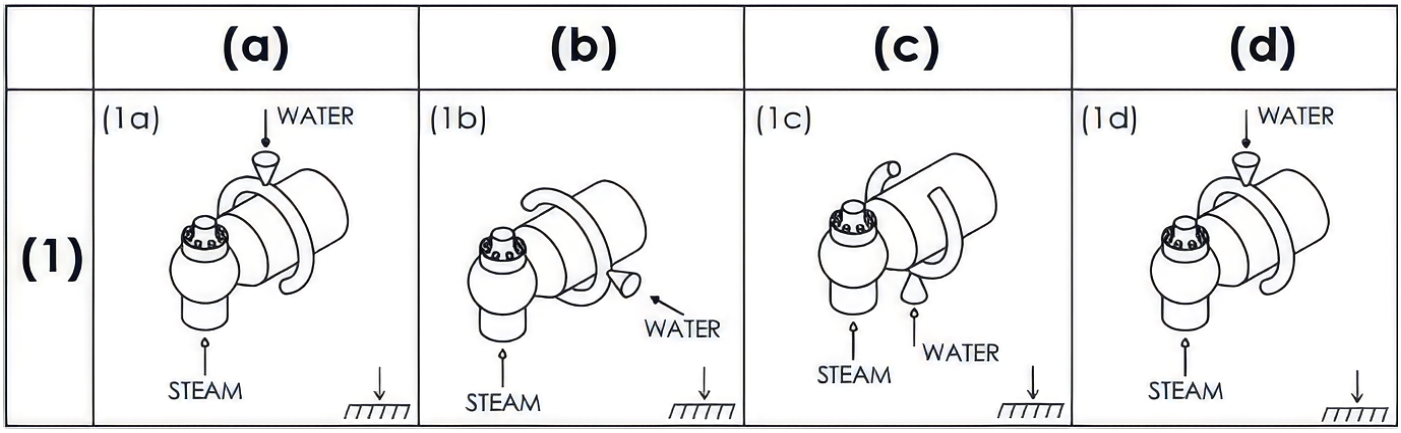

Figure 5. Optional Inlet, Outlet, and Spray-Water Connection Orientations, Angle FTO

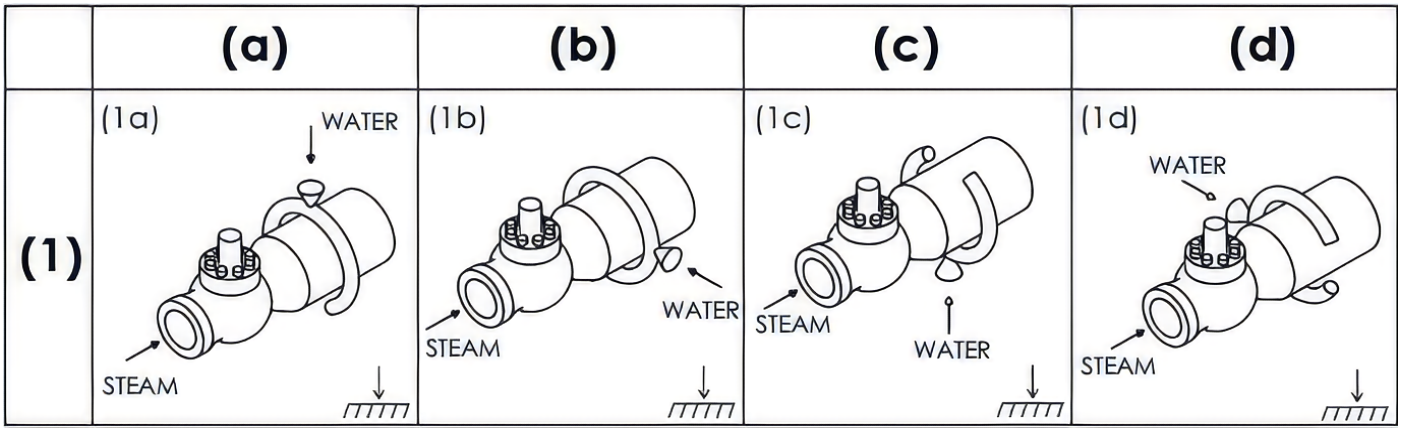

Figure 6. Optional Inlet, Outlet, and Spray-Water Connection Orientations, Globe

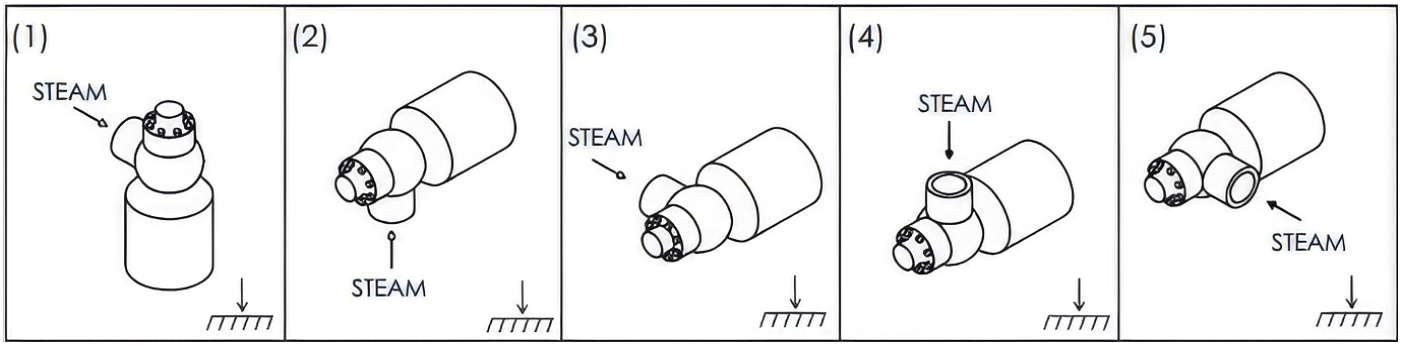

Figure 7. Optional Inlet, Outlet Connection Orientations, Angle No Desuperheater

Copyright 2026 Baker Hughes Company. All rights reserved.

Actuator Support for Horizontally Installed Valves

Actuator support is not always required, but it may be necessary in certain cases, such as with heavier spring-return actuators, actuators with integrated volume chambers, or third-party actuators where Masoneilan does not have full design control of the yoke or mounting arrangement.

Whenever possible, Masoneilan designs a self-supporting actuator with a robust bonnet connection. This is preferred for valves that may be displaced during system temperature transitions. For self-supporting installations, the actuator yoke should be oriented with its structural webs perpendicular to the ground to maximize rigidity (see Figure 4). This orientation may affect instrument mounting and may require a remote-mounted positioner depending on the application and installation.

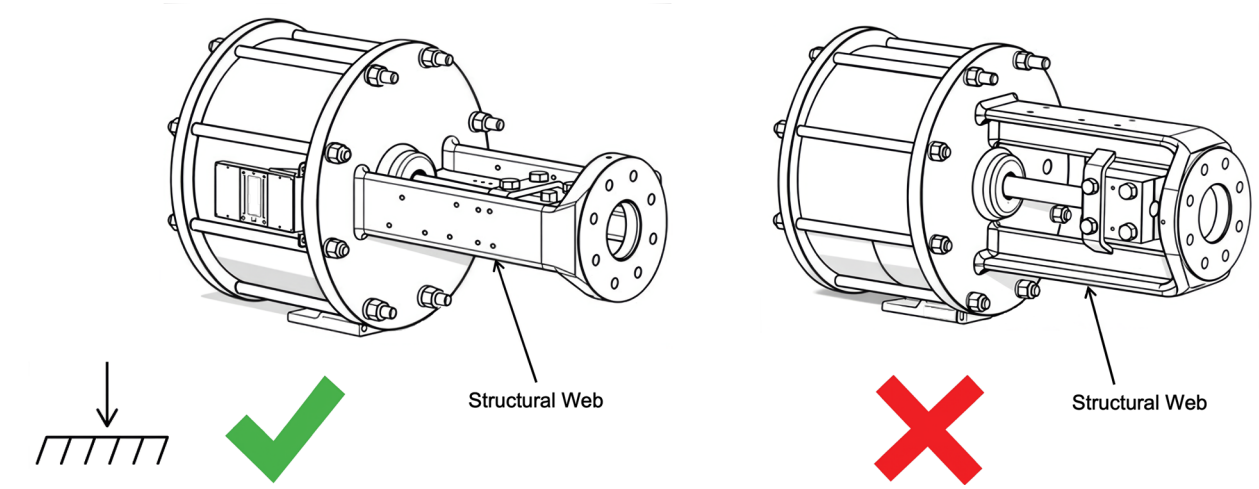

When support is required, Masoneilan will identify the support location and recommended static support load on the general arrangement drawing. For large, horizontally mounted actuators, Masoneilan recommends a spring-loaded saddle support to minimize stress on the actuator, plug, and stem. This support must be periodically inspected to maintain proper alignment and ensure it functions correctly through piping temperature transitions. Due to thermally induced piping deflection that cannot be fully accounted for by the valve supplier, the final support type and method remain within the customer's scope. Non-pneumatic and third-party actuators are evaluated on a case-by-case basis. Refer to the Masoneilan 84003 SteamForm Instruction & Operating Manual (BHMN-84003-IOM-31013C-X-0620) for interface details for Masoneilan actuators.

Drains and Pipe Slopes

Improper condensate drainage can cause flashing, erosion, and water hammer damage and must be addressed before valve operation. All condensate must be removed from the system, with outlet piping sloped away from the valve and drains installed at all upstream and downstream low points. The SteamForm valve must **never** be used as a condensate trap, as passing condensate through the trim leads to flashing, erosion, and diffuser damage.

For horizontal installations with the inlet flange oriented sideways or upward, a drain connection must be provided at the lowest point of the valve body to remove collected condensate. When the valve body is the system low point, factory-supplied body drains may be used. Proper drain placement throughout the piping system reduces water fallout and minimizes the risk of water hammer damage.

Warning: Failure to install a condensate drain at all piping low points can result in flashing and water hammer damage to the StreamForm valve and surrounding system.

Copyright 2026 Baker Hughes Company. All rights reserved.

Seat Bypass Systems (Warm-Up and Preheating Steam)

Warming loops and preheating systems are used in some power plants to preheat the process fluid or maintain downstream temperature, with the objective of minimizing thermal shock to the valve and piping system. When specified, Masoneilan offers several seat bypass (warming kit) options that can be manually operated or fully automated (DCS-controlled). Standard options include:

- Fixed Orifice, Manual: DN 25 [NPS 1] bypass piping with a manual on/off ball valve and fixed-orifice pressure reducer, sized for ~500 lb/hr [230 kg/hr], or higher if required by the preheating guidance equation below.

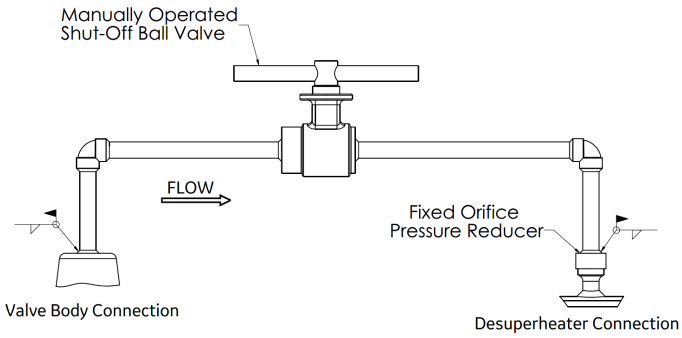

Fixed Orifice, Manual

- Throttling, Manual: DN 25 [NPS 1] bypass piping with a manual on/off ball valve and manual throttling valve, sized for ~200–2500 lb/hr [90–1130 kg/hr].

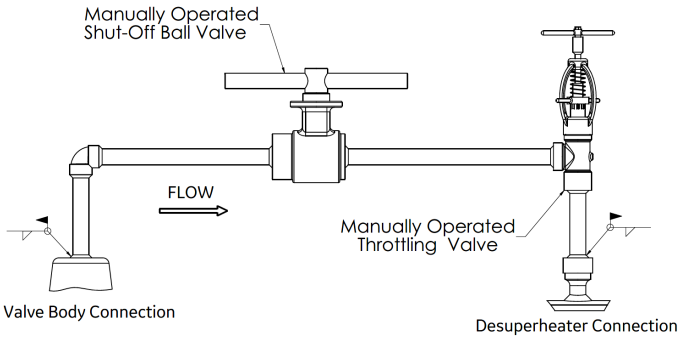

- Throttling, DCS: DN 25 [NPS 1] bypass piping with a manual throttling valve and a DCS-actuated on/off valve (pneumatic/electric/hydraulic), sized for ~200–2500 lb/hr [90–1130 kg/hr]; typically shipped loose for field installation.

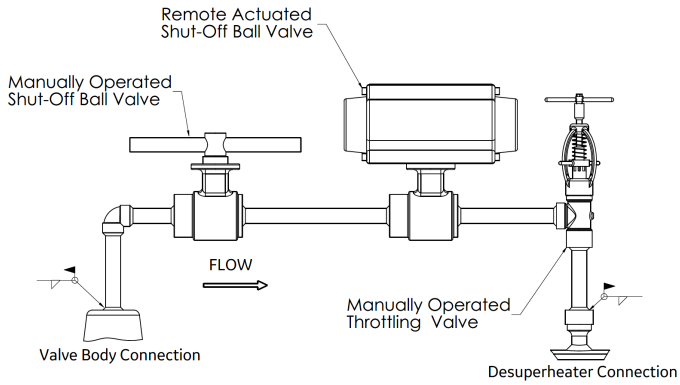

Throttling, DCS

For general preheating guidance (assuming a steam temperature of 1000°F), Baker Hughes recommends the following equation:

$\dot{m}$ **(kg/s) = 0.0104 x D(m) x L(m)**

$\dot{m}$ **(pph) = 0.052 x D(in) x L(in)**

D= O.D. of upstream pipe

L = Pipe length up to the header upstream of the valve

Masoneilan's standard practice is to supply these systems as a field-installation kit. Detailed installation instructions are provided with the kit, including the required assembly and fit-up and welding information.

Copyright 2026 Baker Hughes Company. All rights reserved.

Insulation

All SteamForm valves should be insulated, with the exception of the bonnet and nozzle covers, as shown in the example below. Leaving these components uninsulated prevents unnecessary heat soaking of the bolting and facilitates easier access for inspection and maintenance. Because the exposed surfaces may present a burn hazard, appropriate warning labels shall be applied and, where necessary, protective guards are installed to prevent inadvertent contact during operation. Provision of these additional safety measures is the responsibility of the plant or end user.

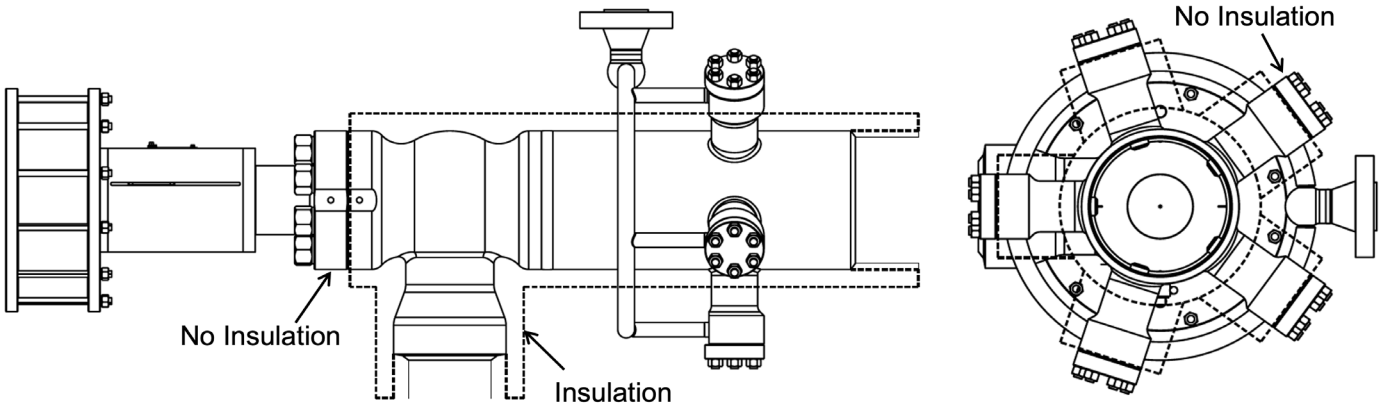

Figure 8. Example of Insulation Installed Around 84003 SteamForm

⚠WARNING

Steam piping and water piping can be very high temperature and can cause injury if touched. Safe guards must be in place around any surfaces that are left exposed.

Warning: Noise insulated within a system remains within a system and propagates downstream. To reduce the effects of downstream noise, sufficient downstream attenuating equipment must be designed within the system.

Accessibility

Larger SteamForm valves require two or more maintenance personnel for servicing. Adequate clearance must be provided to allow safe and effective maintenance. If the valve is not accessible from ground level, a permanent working platform must be installed to provide a safe work area for maintenance personnel. In addition, a safe and clearly defined access route should be planned in advance to support proper startup activities and routine maintenance.

Temperature Control Methods

The SteamForm valve must always be designed around the most critical operating scenario. This may include intermittent conditions such as plant startup, turbine trips, or load rejections, as well as steady-state operation in continuous process applications. Regardless of operating mode, the selected temperature control method must be considered together with valve design to achieve optimal control performance. The spray water control valve must not be opened before the steam conditioning valve is opened. The temperature set point for the spray water control valve is provided by others.

Temperature – Feedback Control

Temperature feedback control is the most common method used to regulate spray water injection. This approach relies on a downstream temperature sensor that sends a signal to a separate spray water control valve to adjust water flow and achieve the desired outlet temperature. For feedback control to function properly, the temperature sensor must be installed downstream at a distance greater than or equal to the minimum required distance specified by the factory for the application. Proper sensor placement is critical to ensure complete vaporization and uniform temperature measurement. Refer to the Temperature Sensor Location section under downstream piping recommendations for additional guidance.

Copyright 2026 Baker Hughes Company. All rights reserved.

Temperature – Feedforward Control

While temperature feedback control is well proven, it inherently involves response lag due to sensor signal transmission and system response time. It also requires sufficient downstream piping length to ensure full spray water evaporation and temperature uniformity—conditions that are not available in all installations. In such cases, a feedforward temperature control method is recommended.

Feedforward control uses a control algorithm based on heat balance calculations and steam property tables programmed into the Distributed Control System (DCS). The algorithm calculates the required spray water flow using upstream steam conditions and a specified downstream temperature set point, providing faster temperature response. Baker Hughes customizes this algorithm to match the specific flow characteristics of each Masoneilan SteamForm valve application requiring feedforward control.

Warning: Failure to provide adequate downstream pipe length prior to the temperature sensor will result in instability and inability to control temperature.

Response Time and Speed

Actuator stroke speed must be considered, as rapid response is required to meet the operating and protection requirements of many plants. Masoneilan prefers pneumatic actuation and has extensive experience achieving fast and reliable operation through proper selection of instrumentations such as boosters, transfer valves, and volume tanks to meet a wide range of trip scenarios. These configurations support fail-open, fail-close, and position-lock functions, including operation during loss of plant air.

Typical pneumatic actuator stroke times are in the 2–3 second range. When faster response is required, electrohydraulic actuation may be considered. A Baker Hughes Masoneilan Certified Technician should be consulted to determine the most suitable actuation method for each application.

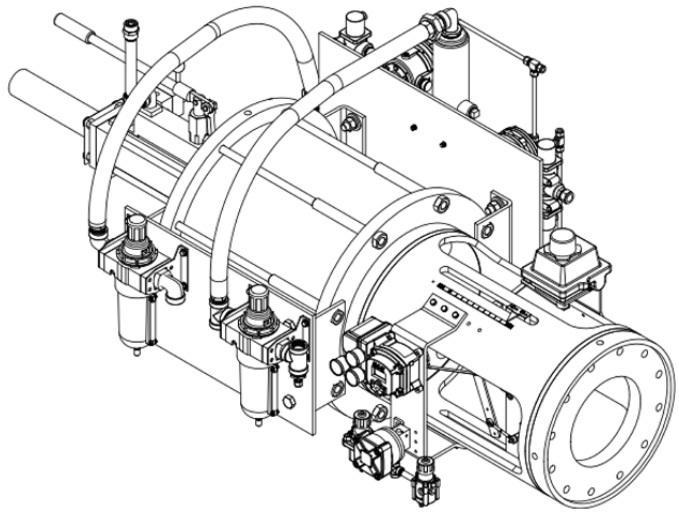

Figure 9. Example of Custom Masoneilan High Speed Actuator

Start-Up and Commissioning

Steam conditioning systems require a thorough commissioning process—including hydrostatic testing, flushing, and, when required, steam blows—to remove construction debris, slag, scale, and other contaminants. These materials can damage valves by lodging in moving components or blocking critical trim passages. The spray water system must also be fully flushed, as spray water valves, nozzles, and strainers are particularly susceptible to particle damage.

Steam and water lines must be completely cleaned before installing operational trim and spray nozzles; damage caused by improper cleaning or installation is not covered under warranty. With the SteamForm start-up trim installed and spray nozzles removed, all contaminants must be flushed from the system. Cleaning with operational trim installed can damage finished surfaces, leading to premature erosion, leakage, unstable control, reduced flow capacity, or plug sticking due to debris-induced galling.

To support different commissioning strategies, Masoneilan offers optional trim packages for hydro testing, flushing, and commissioning, including sacrificial start-up trim. Similar hydro and flushing kits are available for spray water valves and desuperheater nozzles when required. A startup and commissioning procedure should be defined early in the design process to ensure proper line cleanliness and reliable operation. Baker Hughes strongly recommends the use of sacrificial start-up trim to protect critical sealing and flow surfaces during commissioning by diverting debris away from operational components. Applicable configurations and installation details are described in the Masoneilan 84003 SteamForm Instruction & Operating Manual (BHMN-84003-IOM-31013C-X-0620)

Copyright 2026 Baker Hughes Company. All rights reserved.

Commissioning Trim
(Angle Bolted Bonnet “AB”)

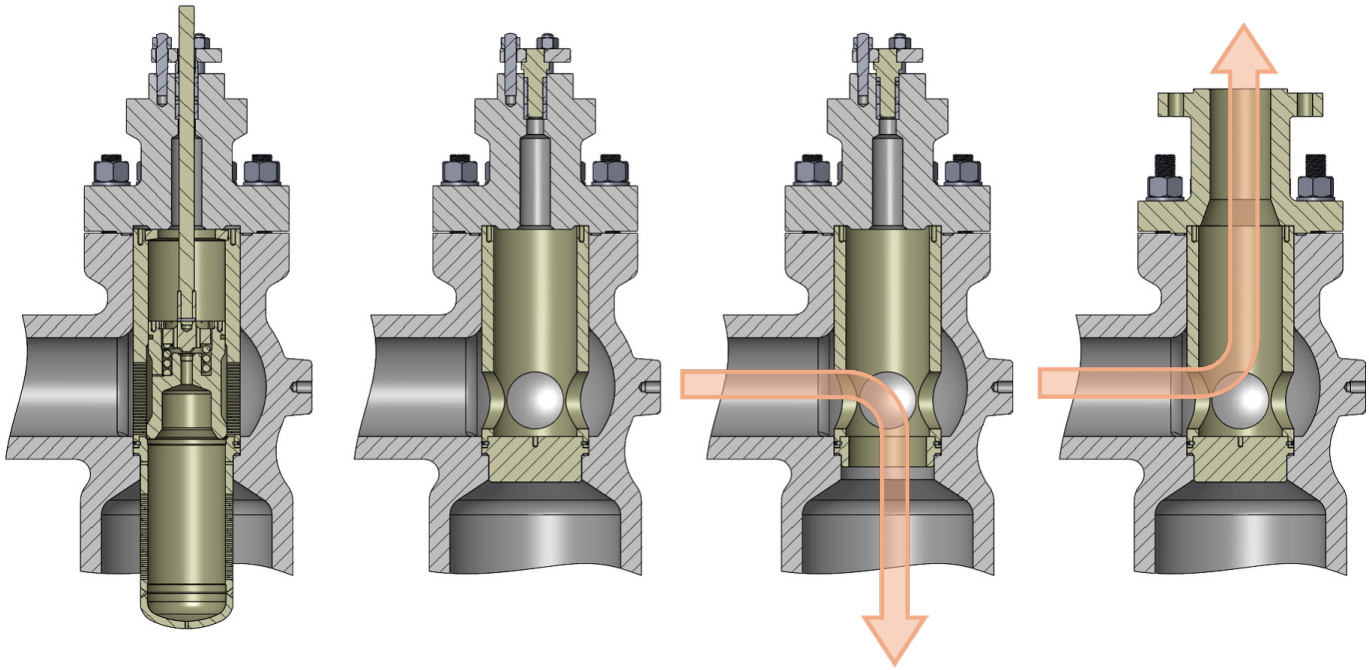

Operational | Hydro | Flush Through | Flush-Out

Commissioning Trim
(Pressire Seal Bolted Bonnet “AP”)

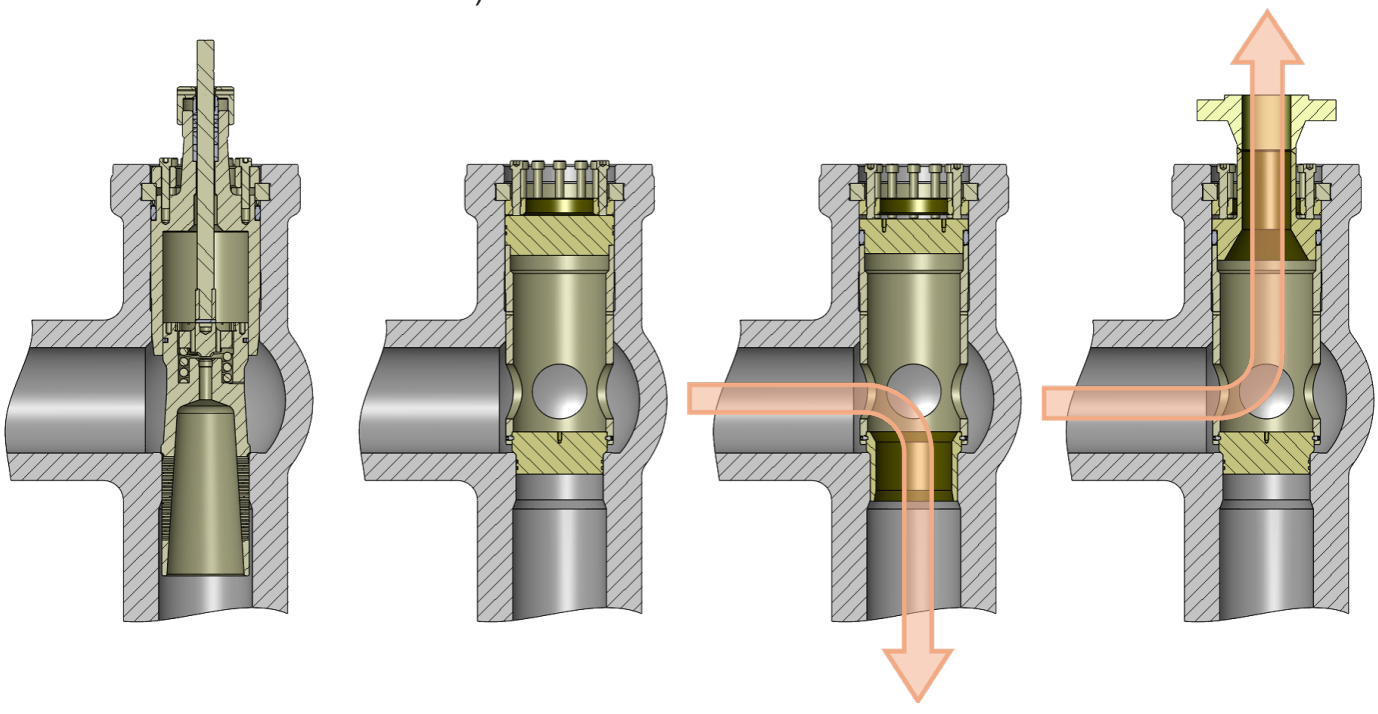

Operational | Hydro | Flush Through | Flush-Out

Copyright 2026 Baker Hughes Company. All rights reserved.

Desuperheater Nozzle Trim

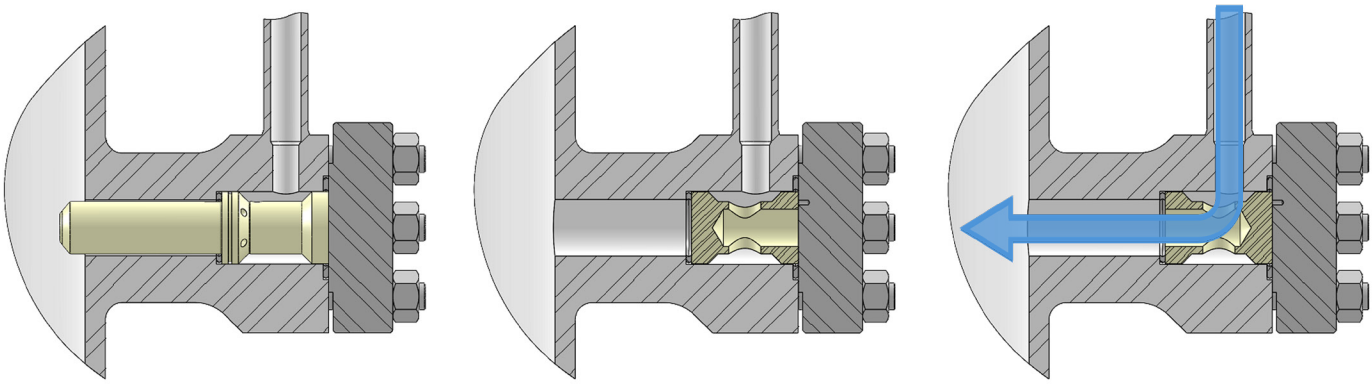

Operational | Hydro | Flush Through

Trim Installation Device (TID)

Horizontally installed valves present several challenges, most notably trim assembly and disassembly, especially on larger valves where the trim is long, heavy, and difficult to handle. To address this, Masoneilan engineers developed a highly successful cartridge-style trim design that allows the trim to be assembled outside the valve as a single cartridge and then installed into the horizontal valve body in one piece.

Supporting this approach is a dedicated installation tool, the installation cradle, which attaches to the valve body and provides an aligned sliding surface to guide the trim cartridge into position safely and efficiently. The cradle can also be used for on-site trim assembly and disassembly. This simple, proven solution has received strong feedback from technicians and customers.

Adequate clearance must be provided to accommodate the cradle tool; refer to the valve package general arrangement drawings for the required envelope dimensions. Lifting provisions for the trim components and cartridge are the responsibility of the end user or customer. Due to the hazards associated with handling heavy components, particularly on large valves, this work must be performed by qualified technicians using appropriate lifting practices and safety precautions.

For step-by-step instructions, refer to Trim Installation Guide for Horizontally Installed SteamForm Valves with Bolted Bonnet (model numbers ending in “AB”) (BHMN-84003-SteamForm-Tool-IOM-34634A-0524).



Copyright 2026 Baker Hughes Company. All rights reserved.

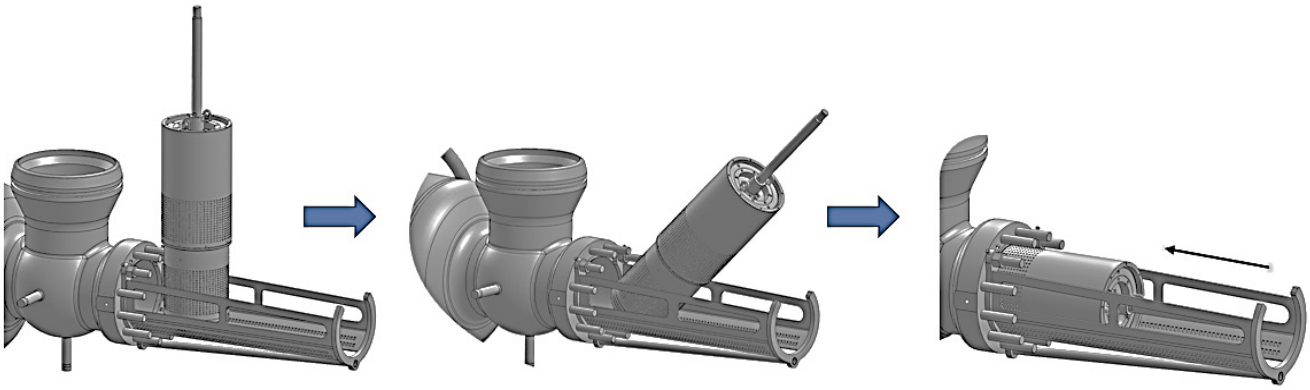

Post Weld Heat Treatment and Hydro-Testing

For valves with weld-end connections, it is permitted and recommended to weld the valve into the piping system with the trim installed. The valve plug may be in either the open or closed position, provided that post-weld heat treatment (PWHT) is performed locally at the weld joint and that hold times are reasonable and in accordance with ASME Section VIII and the applicable ASTM material specifications.

The valve should remain completely uninsulated during welding and PWHT, and heating should be limited strictly to the weld areas. Unnecessary heating of other valve regions is not recommended. Care must be taken to minimize slag and welding debris entering the piping system. All welding must be performed by qualified welders using standard safety practices.

Following welding, post-weld heat treatment, and all required nondestructive examinations, weld joints should be hydrostatically tested in accordance with the applicable piping design code. All 84003 SteamForm valves are hydrotested at the factory to meet relevant codes and standards, including ASME B16.34, ASME B16.5, and ASME B31.1/B31.3, where applicable, as well as other requirements such as PED and the ASME Boiler and Pressure Vessel Code when specified.



Hydrostatic testing of the complete steam system after valve installation is the responsibility of the end user when required by code or project specifications. Refer to the startup and commissioning section for information on commissioning fixtures and hydrotest tooling that may be required to perform these tests.

SteamForm Assembly

The SteamForm valve must be installed so that flow through the valve follows the direction indicated by the flow arrow on the valve body. After the steam lines have been thoroughly cleaned and hydrostatically tested, the operational trim may be installed. For startup assistance from a certified technician, contact your local Baker Hughes Masoneilan sales office or the factory. Refer to the SteamForm instruction manual for the complete installation procedure.

In addition, review the applicable general arrangement and envelope drawings to confirm that the valve and actuator installation complies with the approved design and installation recommendations.

Commissioning Spares

A complete set of commissioning spares should be available on site at all times to minimize SteamForm downtime. At a minimum, commissioning spares must include a full set of gaskets and packing required for reassembly. Soft parts such as gaskets and packing must never be reused once removed from a valve, and components must not be interchanged with parts supplied for other valves.

Recommended spares and soft goods are dependent on the valve configuration and desuperheater type. Detailed part identification is provided in the Masoneilan 84003 SteamForm Instruction & Operating Manual (BHMN-84003-IOM-31013C-X-0620) and fully defined within the project-specific documentation provided with each 84003 SteamForm design. For spare parts requests, contact your regional Baker Hughes sales office, aftermarket center, or authorized channel partner.

Copyright 2026 Baker Hughes Company. All rights reserved.

Bypass Applications

In turbine bypass applications, particularly bypass-to-condenser service, the SteamForm valve plays a critical role in protecting equipment during high-pressure and high-temperature excursions. These applications require a significant reduction in steam heat to meet condenser enthalpy and design limits, with steam temperature reduced to near saturation before admission to the condenser. Rapid response is also essential to keep safety valves closed and prevent steam from venting outside the closed-loop system. In addition, noise control is a key concern, as high-energy steam discharged into thin-wall ducting can act as a noise amplifier.

Process Control

Controlling temperature at or near saturation is challenging due to the limitations of temperature sensing technology. When steam reaching the sensor is wet, the sensor detects the presence of liquid water and incorrectly signals that the steam is sufficiently cooled, leading to measurement inaccuracies, instability, and large process variability.

Reducing steam temperature to saturation requires the injection of large quantities of water. High water-to-steam ratios increase the risk of pipeline flooding and severe water fallout, with risk increasing as the travel distance of the un-vaporized water increases. To minimize these effects, close coupling of the SteamForm valve with a back-pressure dump tube is recommended. This configuration forces any un-vaporized water through the pressure-reducing dump tube, where a low-pressure region promotes rapid flashing and improved mixing. Feedforward temperature control is required in this arrangement to maintain stable and accurate downstream temperature control.

Back-Pressure Dump Tubes

A Dump Tube is a fixed capacity diffuser (single or multistage perforated tube) installed in a condenser inlet duct to safely manage steam during turbine bypass, start-up, or shutdown. It reduces high-pressure steam, limits noise, and protects condenser internals by controlling steam expansion.

Back-pressure dump tubes are a key part of bypass system design, and their pressure drop should be properly staged with the SteamForm valve and associated piping to balance performance, equipment size, and installation cost. Proper pressure-drop distribution helps minimize component sizes, reduce total system cost, and achieve acceptable noise levels. For best results, involve both the bypass valve supplier and condenser supplier early to ensure proper equipment integration and overall system performance.

Masoneilan works with reputable dump tube manufacturers and, in certain applications, offers its own DT-series dump tube solution. For additional information, consult Baker Hughes engineering through the appropriate channel partner or sales representative.

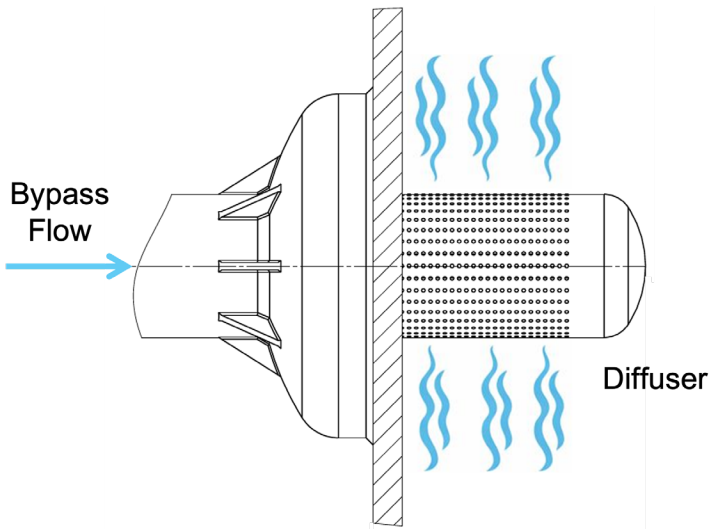

Condenser Wall

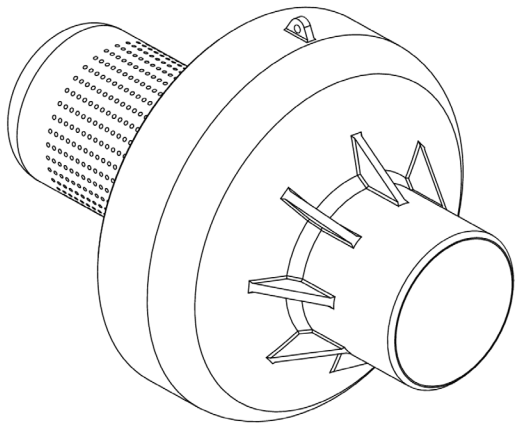

Masoneilan DT Series
Dump Tube

Copyright 2026 Baker Hughes Company. All rights reserved.

System Noise Evaluation

Noise in turbine bypass systems results from multiple sources, including the control valve, dump tube, and condenser duct. While acoustical insulation is effective at protecting piping from excessive noise, noise generated within a closed system will propagate downstream until a noise-attenuating element is encountered. As the noise reaches the thin-walled condenser duct, the duct can act as a noise amplifier, significantly increasing overall sound levels.

To mitigate this effect, Baker Hughes strongly recommends acoustical insulation on all thin-walled ducting wherever possible. Additional challenges arise when multiple bypass lines discharge into a single injection point, as jet streams from multiple dump tubes can combine and create significantly higher noise levels. To minimize this effect, dump tube jets should remain independent by maintaining adequate spacing between discharge points. Noise levels in bypass-to-condenser applications have been measured in excess of **110 dBA.** For optimal results, noise considerations should be evaluated early in the design phase by both the system designer and the turbine bypass equipment supplier.

Final Recommendations

Steam conditioning applications require careful evaluation from early design through installation. Baker Hughes provides end-to-end support and technical expertise to deliver reliable SteamForm solutions by working closely with Masoneilan application engineers and sales teams to define system requirements, performance targets, and lifecycle needs.

Severe-service applications demand additional design scrutiny, where early engineering effort can significantly reduce future downtime and maintenance costs. Engagement with Baker Hughes Masoneilan Certified Technicians is recommended for application-specific evaluation and long-term reliability. Field Service support during installation and commissioning further helps ensure proper installation and minimizes startup delays. Contact your regional Baker Hughes sales office, aftermarket center, or channel partner for technical or field service support.

Copyright 2026 Baker Hughes Company. All rights reserved.

Notes

Copyright 2026 Baker Hughes Company. All rights reserved.

Notes

Copyright 2026 Baker Hughes Company. All rights reserved.

Find the nearest local Channel Partner in your area:

valves.bakerhughes.com/contact-us

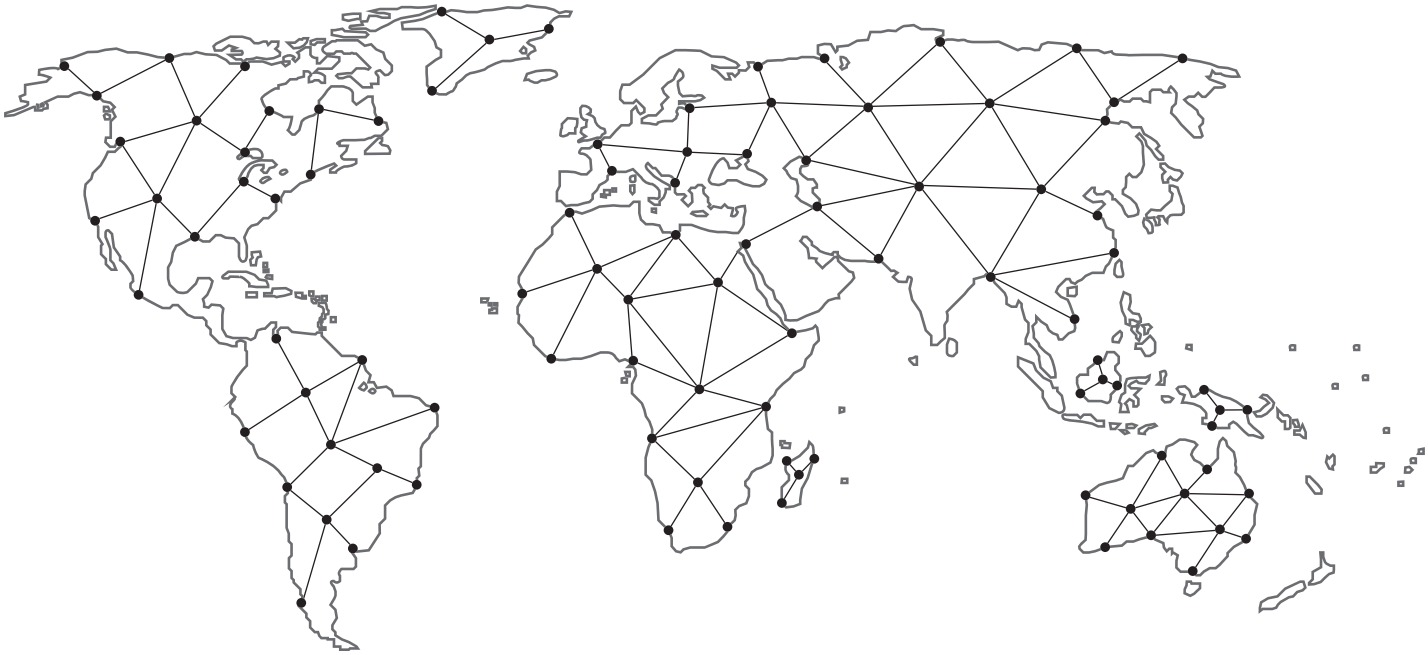

Tech Field Support and Warranty:

Phone: +1-866-827-5378

valvesupport@bakerhughes.com

valves.bakerhughes.com

Copyright 2026 Baker Hughes Company. All rights reserved. Baker Hughes provides this information on an "as is" basis for general information purposes. Baker Hughes does not make any representation as to the accuracy or completeness of the information and makes no warranties of any kind, specific, implied or oral, to the fullest extent permissible by law, including those of merchantability and fitness for a particular purpose or use. Baker Hughes hereby disclaims any and all liability for any direct, indirect, consequential or special damages, claims for lost profits, or third party claims arising from the use of the information, whether a claim is asserted in contract, tort, or otherwise. Baker Hughes reserves the right to make changes in specifications and features shown herein, or discontinue the product described at any time without notice or obligation. Contact your Baker Hughes representative for the most current information. The Baker Hughes logo, Masoneilan and SteamForm are trademarks of Baker Hughes Company. Other company names and product names used in this document are the registered trademarks or trademarks of their respective owners.

Baker Hughes

BHMN-84003-IG-31014C-0926 09/2026

bakerhughes.com