# Radiation Resistant Proximity System

Datasheet

Cordant™

141595 Rev. R

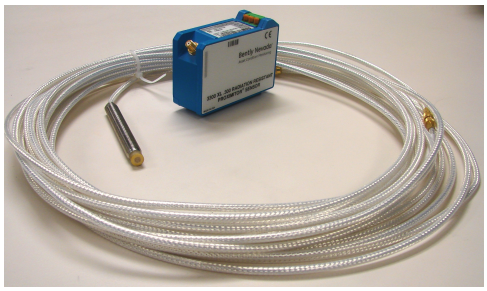

## Description

The Bently Nevada™ Radiation Resistant Proximity Transducer System enables you to monitor pumps, motors, and other rotating machinery operating in gamma-radiation environments.

The Radiation Resistant Proximity Transducer System consists of:

- A 0.300 or 0.420 radiation resistant probe
- A radiation-resistant extension cable
- An XL Radiation Resistant Proximitor Sensor

The Radiation Resistant Proximity Transducer System maintains its signal integrity better than standard Bently Nevada systems when exposed to gamma-radiation environments. The systems are available with probe diameters of 0.300 and 0.420 inches, each with different linear ranges. The 0.300 system is available in 15-, 40-, and 110-foot lengths, and the 0.420 system is available in a 15-foot length only. The longer 40- and 110-foot systems allow you to remotely locate the Proximitor Sensor, minimizing the Proximitor Sensor's exposure to radiation and extending its operational life.

The 330280 Proximitor Sensor is backward compatible and interchangeable with the 36363 0.300 Proximitor Sensor, and the 330281 Proximitor Sensor is backward compatible and interchangeable with the 23268 0.420 Proximitor Sensor.

The Radiation Resistant Proximity Transducer System is compatible with 3300 and Bently Nevada™ 3500 Series Monitoring Systems that have been modified to use the previous 36363 or 23268 Radiation Resistant Systems. Please contact your local Bently Nevada sales professional for information on specific monitor modifications.

CE

Baker Hughes

## Proximitor Sensor

The XL Proximitor Sensor physical packaging permits high-density DIN-rail installation. It can also be mounted in a traditional panel mount configuration, where it shares an identical “footprint” to older 4-hole mounted Proximitor Sensor designs. Both mounting base options provide electrical isolation and eliminate the need for separate isolator plates. Improved RFI/EMI immunity allows the XL Proximitor Sensor to achieve European CE mark approvals without requiring special shielded conduit or metallic housings, resulting in lower installation costs and complexity.

The XL’s SpringLoc terminal strips require no special installation tools and facilitate faster, more robust field wiring connections by eliminating screw-type clamping mechanisms that can loosen over time.

# Specifications

Unless otherwise noted, these specifications describe a Proximitor Sensor, extension cable, and probe under these conditions:

- At +22°C (+72°F).
- Using a -24 Vdc power supply, a 10 kΩ load, and an AISI E4140 steel target

Unless noted, these specifications apply before irradiation.

## Electrical

| | |
|---|---|
| Electrical | Accepts one non-contacting Radiation Resistant Proximity Probe and Extension Cable |
| Power | Requires -17.5 Vdc to -26 Vdc without barriers at 18 mA maximum consumption. Operation at a more positive voltage than -23.5 Vdc can result in reduced linear range |
| Output Resistance | 50 Ω |
| 0.300 Probe dc resistance (nominal) (Rprobe) | 1.6 Ω + 0.426 Ω/m (0.130 Ω/ft) |
| 0.420 Probe dc resistance (nominal) (Rprobe) | 2.5 Ω + 0.410 Ω/m (0.125 Ω/ft) |
| Extension Cable dc Resistance (nominal) | |
| Center conductor (Rcore) | 0.36 Ω/m (0.11 Ω/ft) |
| Shield conductor (Rjacket) | 0.023 Ω/m (0.007 Ω/ft |
| Extension cable capacitance (nominal) | 63 pF/m (19.2 pF/ft) |
| Field wiring | 0.2 to 1.5 mm2 (16 to 24 AWG) Recommend using 3 conductor shielded triaxial cable field wiring. Maximum length of 305 meters (1,000 feet) between the XL Proximitor Sensor and the monitor. See the frequency response graph for signal roll off at high frequencies when using longer field wiring lengths. |
| Linear Range | |
| 0.300 inch, 15-foot system | Linear range begins at −4.5 Vdc, approximately 0.5 mm (20 mils) from target and is from 0.5 to 1.75 mm (20 to 70 mils). |
| 0.300 inch, 40-foot system | Linear range begins at −4.5 Vdc, approximately 1 mm (40 mils) from target and is from 1 to 2.25 mm (40 to 90 mils). |
| 0.300 inch, 110-foot system | Linear range begins at −4.5 Vdc, approximately 1 mm (40 mils) from target and is from 1 to 2.25 mm (40 to 90 mils). |
| 0.420 inch, 15-foot system | Linear range begins at −5.0 Vdc, approximately 1.0 mm (40 mils) from target and is from 1.0 to 3.3 mm (40 to 130 mils). |
| Incremental Scale Factor (ISF) | |
| 0.300 inch, 15-foot system | 3.94 mV/µm (100 mV/mil) ±15% including interchangeability error when measured in increments of 0.25 mm (10 mils) over the 1.25 mm (50 mil) linear range. |
| 0.300 inch, 40-foot system | 3.94 mV/µm (100 mV/mil) ±17% including interchangeability error when measured in increments of 0.25 mm (10 mils) over the 1.25 mm (50 mil) linear range. |

| | |
|---|---|
| 0.300 inch, 110-foot system | 3.94 mV/µm (100 mV/mil) ±20% including interchangeability error when measured in increments of 0.25 mm (10 mils) over the 1.25 mm (50 mil) linear range. |
| 0.420 inch, 15-foot system | 3.94 mV/µm (100 mV/mil) ±15% including interchangeability error when measured in increments of 0.25 mm (10 mils) over the 2.25 mm (90 mil) linear range. |
| Frequency Response | |
| 15-foot systems | 0 to 10 kHz: +0, -3dB, with up to 305 meters (1000 feet) of field wiring |
| 40-foot system | 0 to 9 kHz: +0, -3dB, with up to 305 meters (1000 feet) of field wiring |
| 110-foot system | 0 to 5 kHz: +0, -3dB, with up to 305 meters (1000 feet) of field wiring |

## Mechanical

| | |
|---|---|
| Probe Tip Material | Fiberglass reinforced epoxy with anhydride curing |
| Probe Case Material | 300 series stainless steel |
| Probe and extension cable specifications | 85 Ω coaxial, Tefzel insulated cable |
| Proximitor sensor material | A308 aluminum |
| Proximitor and housing weight | 198.4 g (0.44 lb) |
| Proximitor without housing weight | 136.0 grams (0.30 lb) |
| Extension cable armor (optional) | Flexible stainless steel with Tefzel outer jacket |
| Tensile strength (maximum rated) | 133 N (30.0 pounds) probe case to probe lead and probe lead to extension cable connectors |
| Connector material | Gold-plated brass |
| Probe case torque | 33.9 Nm (300 in lb) |
| Total system weight (typical) | 1.0 kg (2.2 lb) |

### Thread Engagement Limits

| Probe Case Thread | Maximum Length of Thread Engagement |
|---|---|
| **3/8-24** | 0.563 in |
| **M10x1** | 15 mm |

Maximum thread engagement lengths are per the industry standard of 1.5 times the nominal thread diameter. A fit class matching that of the external probe thread is assumed for all internal threads. Applications with thread engagement lengths exceeding the values in the table above may exhibit binding during installation. Contact your Bently Nevada representative if you require probe thread engagement lengths exceeding the values above. Bently Nevada does not replace proximity probes under warranty due to excessive thread engagement lengths.

## Environmental Limits

| Operating and Storage Temperature Range | |
|---|---|
| Probe | -29°C to +150°C (-20°F to +302°F) |
| Extension cable | -29°C to +150°C (-20°F to +302°F) |
| Proximitor Sensor | -51°C to +100°C (-60°F to +212°F) |
| Relative humidity | Less than a 3% change in Average Scale Factor (ASF) when tested in accordance with IEC standard 68-2-66 |
| System radiation limit | 6.0 Mrads (gamma maximum integrated dose) |

We recommend a maximum 6 Mrads exposure. See Summary Radiation Testing Report

**Table 1: Radiation Degradation Factor**

| After 6.0 Mrads Gamma | | | |
|---|---|---|---|
| 0.300 System | 15-Foot System | 40-Foot System | 110-Foot System |
| Average scale factor change | -5.7% | -12.2% | -17.0% |
| Voltage change at linear range end | -0.4 V | -1 V | -1.1 V |

| 0.420 Proximitor | 15-Foot System |
|---|---|
| Average scale factor change | -21.6% |
| Voltage change at linear range end | -0.56 V |

# Summary Radiation Testing Report

Bently Nevada completed a series of tests to ensure that the product will meet the specifications contained in this document. The information below outlines the details regarding the testing and irradiation. The customer can use this information to validate how the product is used and infer how the product could change with gamma-radiation exposures.

## Important items about the testing

These are limitations and boundary conditions.

- The Device Under Test (DUT) will have the largest parameter shift when the unit is powered up and being irradiated at the same time.
- The gamma-radiation was from a Co60 source. Many 16-inch-long rods were placed in a circular pattern around the DUT to establish uniform radiation and exposure levels around the DUT. The length of the rods ensured that the top and bottom of the DUT were also being irradiated, albeit at a slightly lower level. The dosage rate is the sum effect of all of the rays intersecting at the DUT.

The product was not designed or tested:

- To be a part of the control loop as the product design is for monitoring purposes only,
- For LOCA (loss of coolant accident), sometimes called LOC (loss of coolant), events,
- To withstand neutron radiation, or
- For spike or burst events.

## Observation

We tested a representative sampling of the units and none of the tested units failed. However, the numbers of units tested at the higher radiation levels did not constitute a significant sample size to guarantee the product at these higher levels. Any observation or extrapolation of this data is not a guarantee of the product performance.

| 9 Mrads | |
|---|---|
| ASF Change | Voltage change @ linear range end |
| -7.61% | -0.57 Vdc |
| ASF = Average Scale Factor | |

# Compliance and Certifications

## FCC

This device complies with part 15 of the FCC Rules. Operation is subject to the following two conditions:

- This device may not cause harmful interference.
- This device must accept any interference received, including interference that may cause undesired operation.

## RoHS

RoHS Directive 2011/65/EU

## EMC

EMC Directive 2014/30/EU

# Ordering Information

For the detailed listing of country and product-specific approvals, refer to the *Approvals Quick Reference Guide (108M1756)*.

For additional technical documentation, please log in to bntechsupport.com and access the Bently Nevada Media Library.

## Radiation Resistant Probes

**36448** 0.300 inch, 3/8-24 UNF thread, 5/16-inch wrench flats, without armor

**27482** 0.300 inch, 3/8-24 UNF thread, 5/16-inch wrench flats, with armor

**36447** 0.300 inch, M10 x 1, 8 mm wrench flats, without armor

**36446** 0.300 inch, M10 x 1, 8 mm wrench flats, with armor

### Part Number-AA-BB-CC

| **A: Unthreaded Length Option** | |
|---|---|
| | English Thread Configurations<br>Maximum unthreaded length: 8.8 in<br>Minimum unthreaded length: 0.0 in |
| Example | **04** = 0.4 in |

Unthreaded length must be at least 0.8 inches less than the case length. Order in increments of 0.1 in.

| | |
|---|---|
| | Metric Thread Configurations<br>Maximum unthreaded length: 230 mm<br>Minimumunthreaded length: 0.0 mm |
| Example | **06**= 60 mm |

Unthreaded length must be at least 20 mm less than the case length. Order in increments of 10 mm.

| **B: Overall Case Length Option** | |
|---|---|
| | English Thread Configurations<br>Maximum case length: 9.6 in<br>Minimum case length: 0.8 in |
| **Example** | 24 = 2.4 in<br>Order in increments of 0.4 in |
| | Metric Thread Configurations<br>Maximum case length: 250 mm<br>Minimum case length: 20 mm |
| **Example** | **06**= 60 mm<br>Order in increments of 10 mm |
| **C: Total Electrical length Option** | |
| **18** | 18 inches (0.46 meter) |
| **36** | 36 inches (0.91 meter) |
| **For 36448 and 27482 Probes only** | |
| **72** | 72 inches (1.82 meters) |

## Reverse Mount Radiation Resistant Probes

**27485 -AA** 0.300 inch, 3/8-24 UNF threads

**19056 - AA** 0.420 inch, 3/8-24 UNF threads

| **A: Total Electrical Length Option** | |
|---|---|
| **18** | 18 inches (0.46 meter) (Option for 27485 ONLY) |
| **36** | 36 inches (0.91 meter) |

## 0.300 inch Radiation Resistant Extension Cable

### 27490 - AAAA-BB

| A: Cable Length Option | |
|---|---|
| **0090** | 9.0 feet (2.74 meters) |
| **0120** | 12.0 feet (3.66 meters) |
| **0135** | 13.5 feet (4.12 meters) |
| **0340** | 34.0 feet (10.36 meters) |
| **0370** | 37.0 feet (11.28 meters) |
| **0385** | 38.5 feet (11.73 meters) |
| **1040** | 104.0 feet (31.70 meters) |
| **1070** | 107.0 feet (32.60 meters) |
| **1085** | 108.5 feet (33.08 meters) |
| **B: Armor Option** | |
| **00** | Without armor |
| **01** | With armor |

## 0.420 inch Radiation Resistant Extension Cable

### 127502 - AA

| A: Armor Option | |
|---|---|
| **00** | Without armor |
| **01** | With armor |

Length = 12.0 feet (3.66 meters) only.

## 0.300 inch Radiation Resistant Proximitor Sensor

### 330280 - AAA-BB

## 0.420 inch Radiation Resistant Proximitor Sensor

### 330281 - AAA-BB

| A: System Length Option | |
|---|---|
| **015** | 15 feet (4.6 meters) |
| **040** | 40 feet (12.2 meters) |
| **110** | 110 feet (33.5 meters) |

040 and 110 are options for the 330280 only

| B: Mounting Option | |
|---|---|
| **00** | Panel mount hardware |
| **01** | DIN mount hardware |

## Accessories

| | |
|---|---|
| 02173100 | Tefzel bulk field wire.<br>1.0 mm2 (18 AWG), 3-conductor, twisted cable, drain wire, and aluminum shield. Specify length in feet. |
| 138492-01 | Replacement panel-mount mounting pad |
| 138493-01 | Replacement DIN-mount mounting pad |

| | |
|---|---|
| 148722-01 | XL Test Plug.<br><br>The XL Test Plug contains three small test pins attached to three color-coded wires 1 meter in length, each terminated in a banana plug. The 3-pin adapter plugs into the test pinholes on XL-style Proximitor Sensors. It is used to check the performance of the Proximitor Sensor from the test pin holes in the terminal strip without requiring the removal of the field wiring. |
| 04310310 | XL Proximitor Sensor Panel-mount Screws. Package includes four 6-32 UNC thread forming mounting screw. |
| 04301007 | 3/8-24 Probe Lock Nut with safety wire holes Single probe lock nut with two holes drilled through the nut in order to secure the lock nut in place with safety wire. |
| 04301008 | M10 x 1 Probe Lock Nut with safety wire holes. Single probe lock nut with two holes drilled through the nut to secure the lock nut in place with safety wire. |
| 00510400 | Male extension cable connector for probes and extension cables. |
| 00510401 | Female extension cable connector. |
| 163356 | Connector Crimp Tool Kit.<br><br>Includes connector installation instructions, and carrying case. |
| Bently Manuals | Log in to https://bntechsupport.com/ to access all Bently Manuals, FWDs, App Notes, and Installation Guides in all available languages. |

## Graphs and Figures

Note: All dimensions shown in millimetres [inches] except as noted

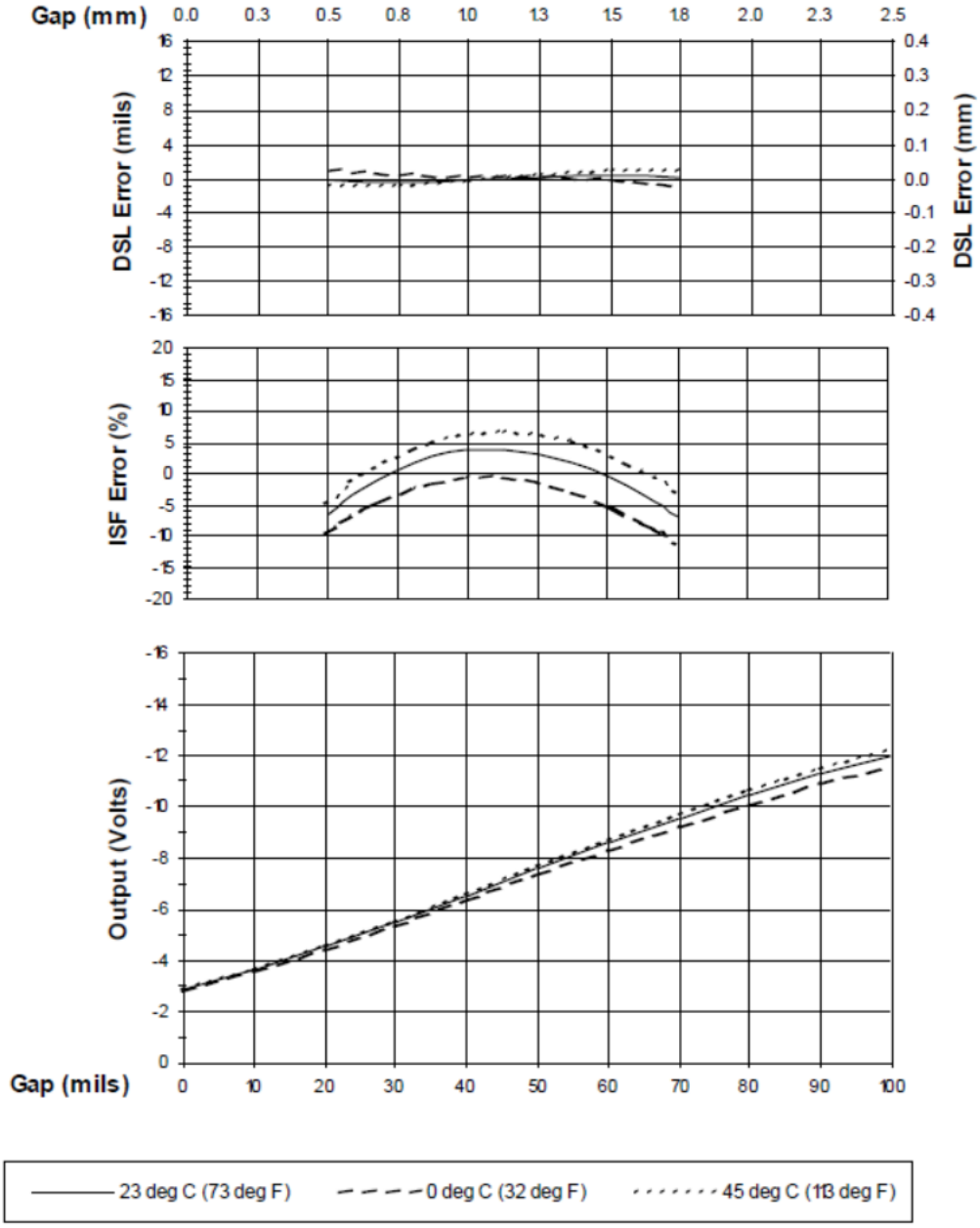


**Figure 1: Typical Radiation Resistant 0.300" 15-ft System over ambient Temperature Range**

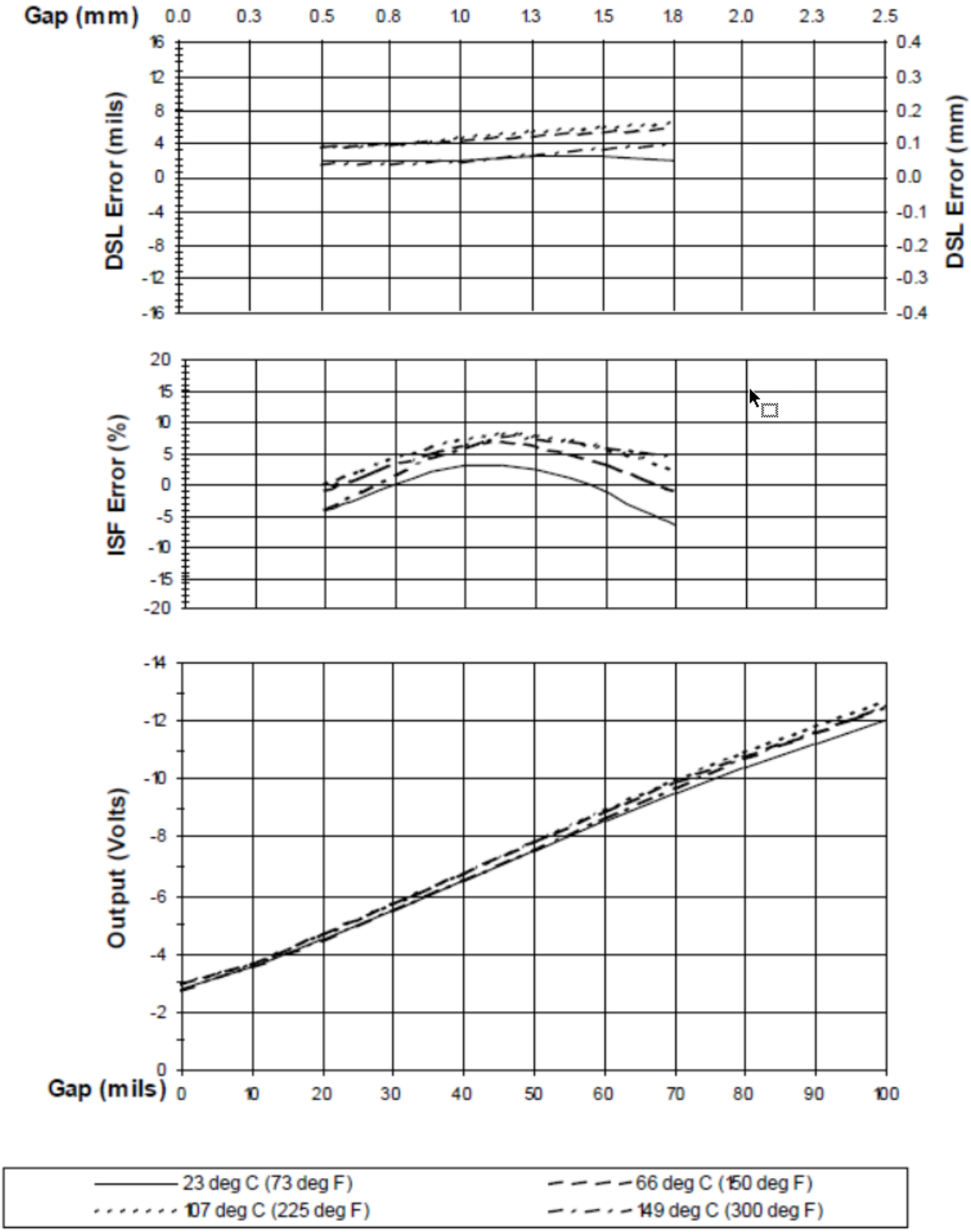


**Figure 2: Typical Radiation Resistant 0.300" 15-ft Probe Only @ Th**



Baker Hughes

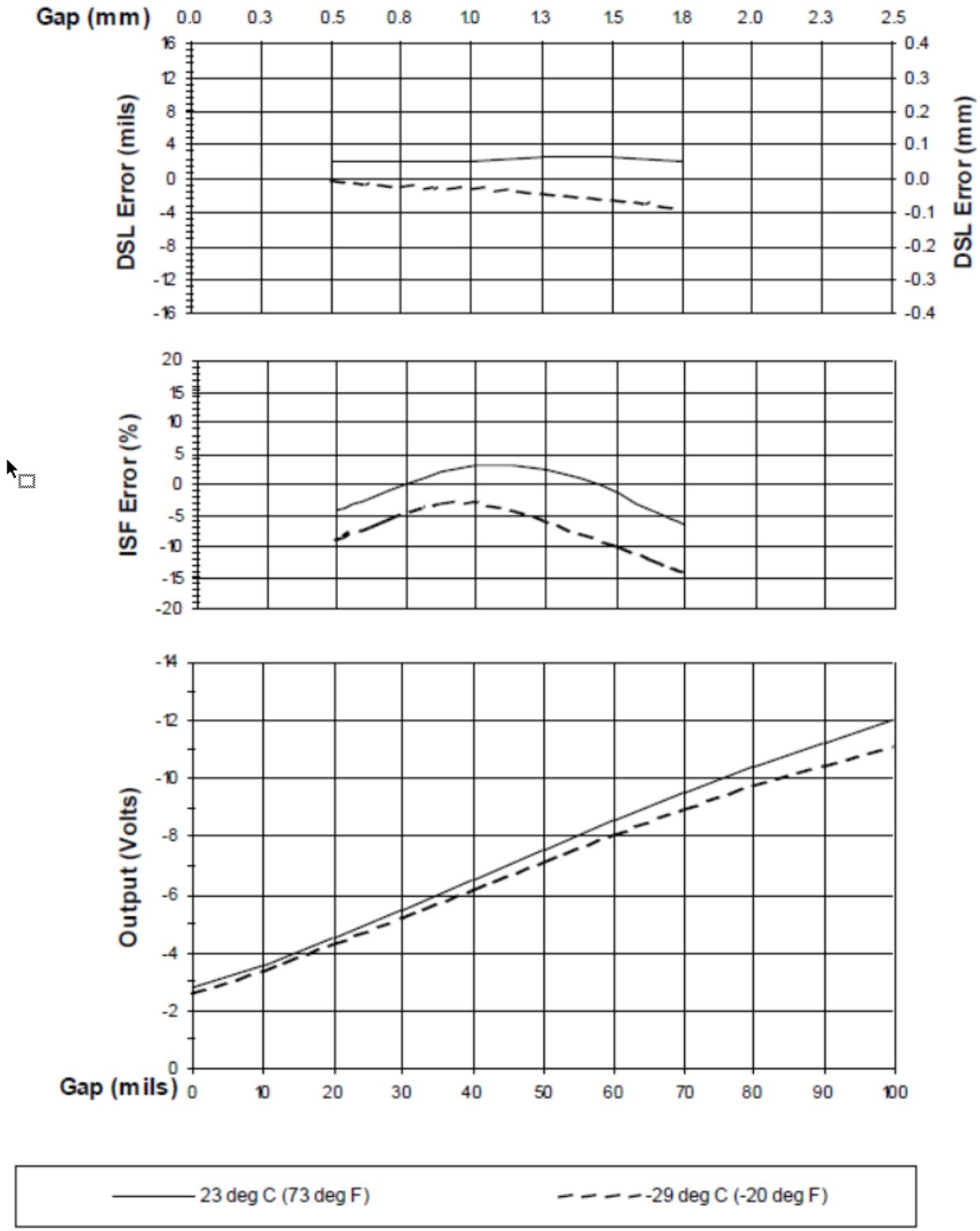


**Figure 3: Typical Radiation Resistant 0.300" 15-ft Probe Only @ Tc**

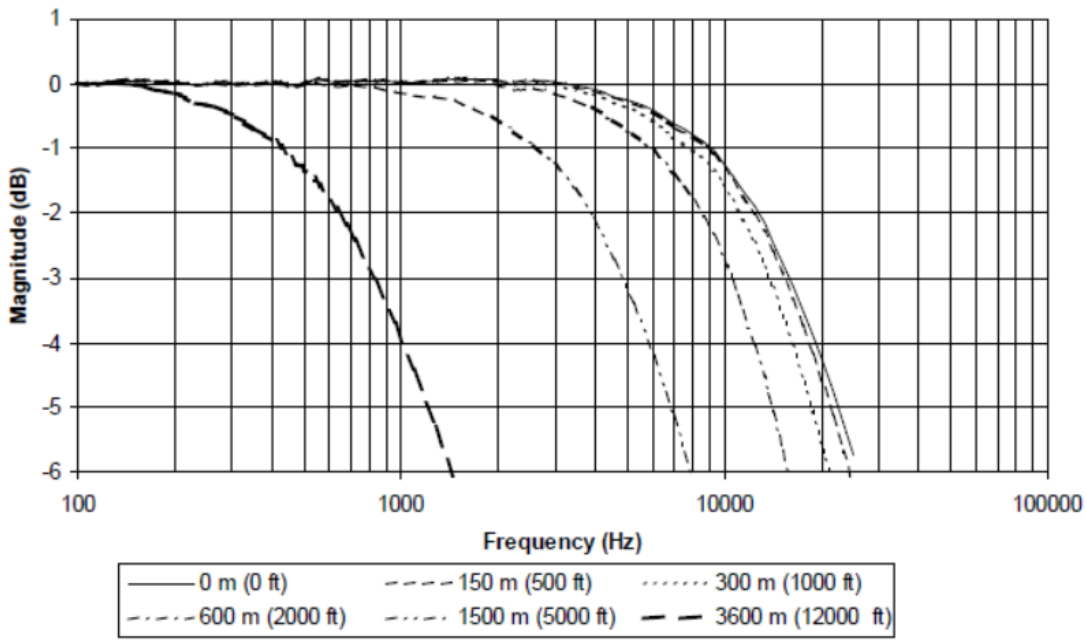


**Figure 4: Frequency Response, typical Radiation Resistant 0.300" 15-ft System with varying lengths of field wiring attached, no barriers**

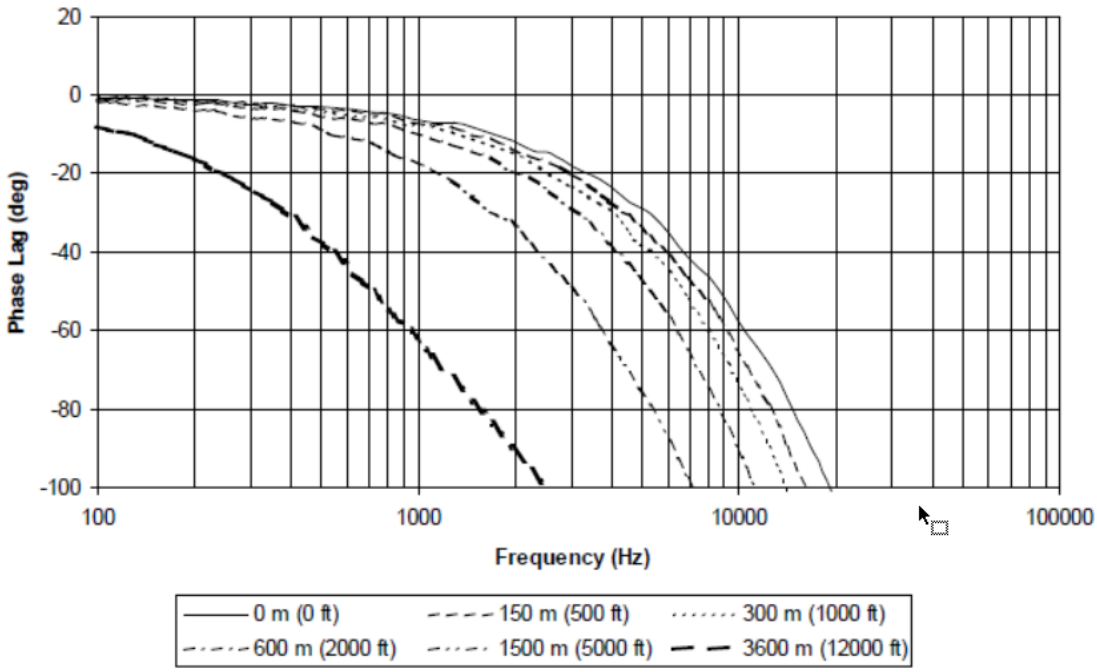


**Figure 5: Phase Response, typical Radiation Resistant 0.300" 15-ft System with varying lengths of field wiring attached, no barriers**

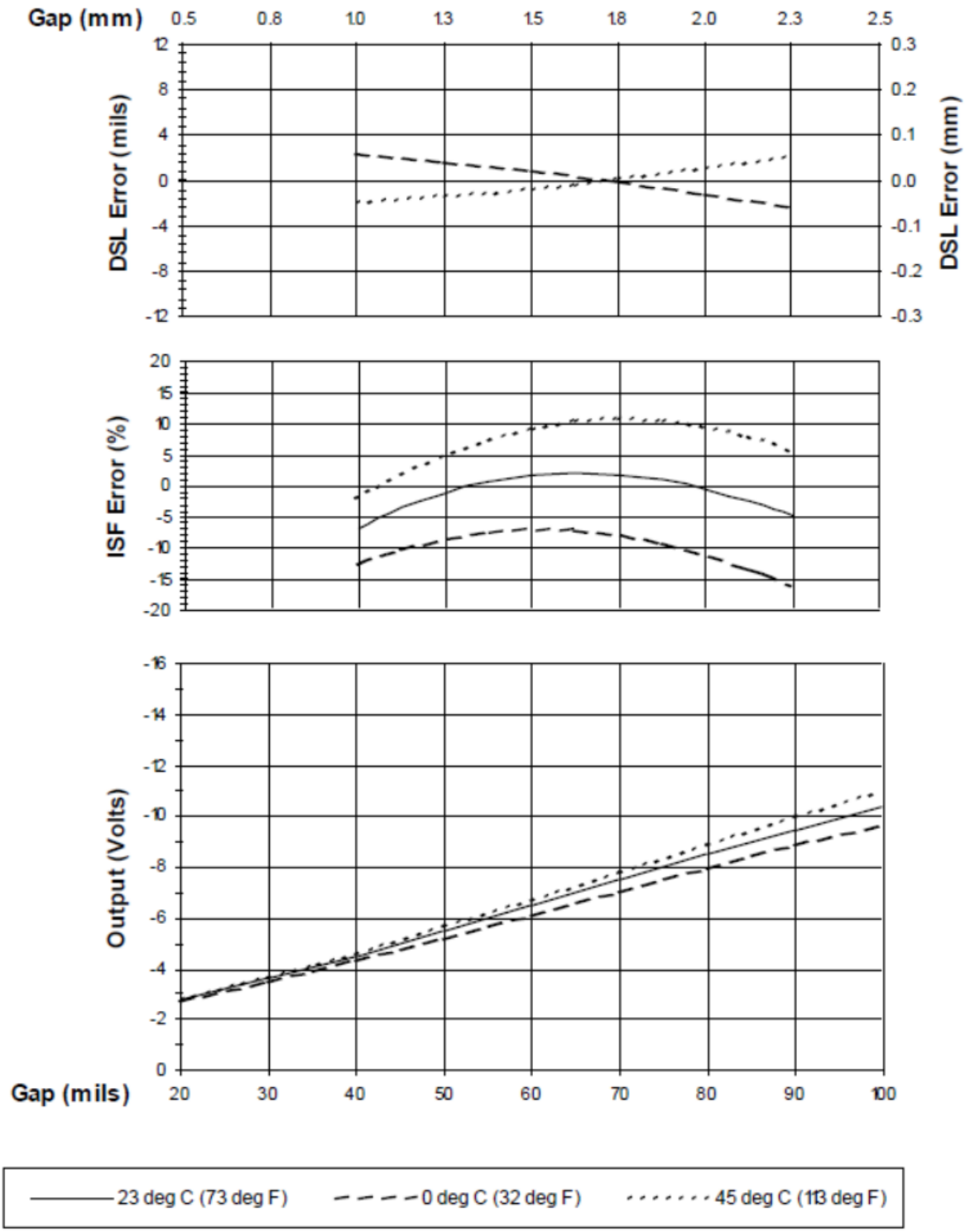


**Figure 6: Typical Radiation Resistant 0.300" 40-ft System over ambient Temperature Range**

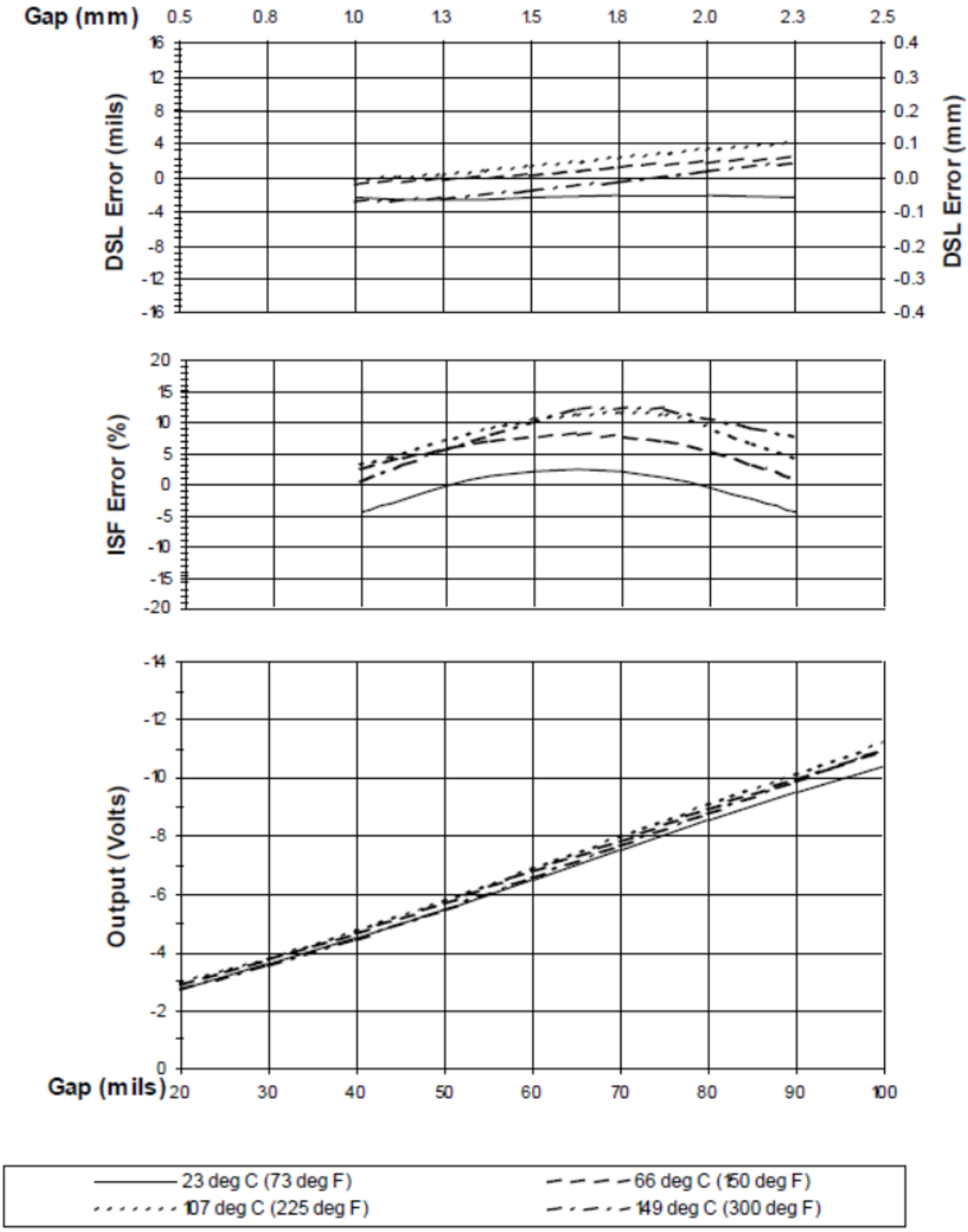


**Figure 7: Typical Radiation Resistant 0.300" 40-ft Probe Only @ Th**



Baker Hughes

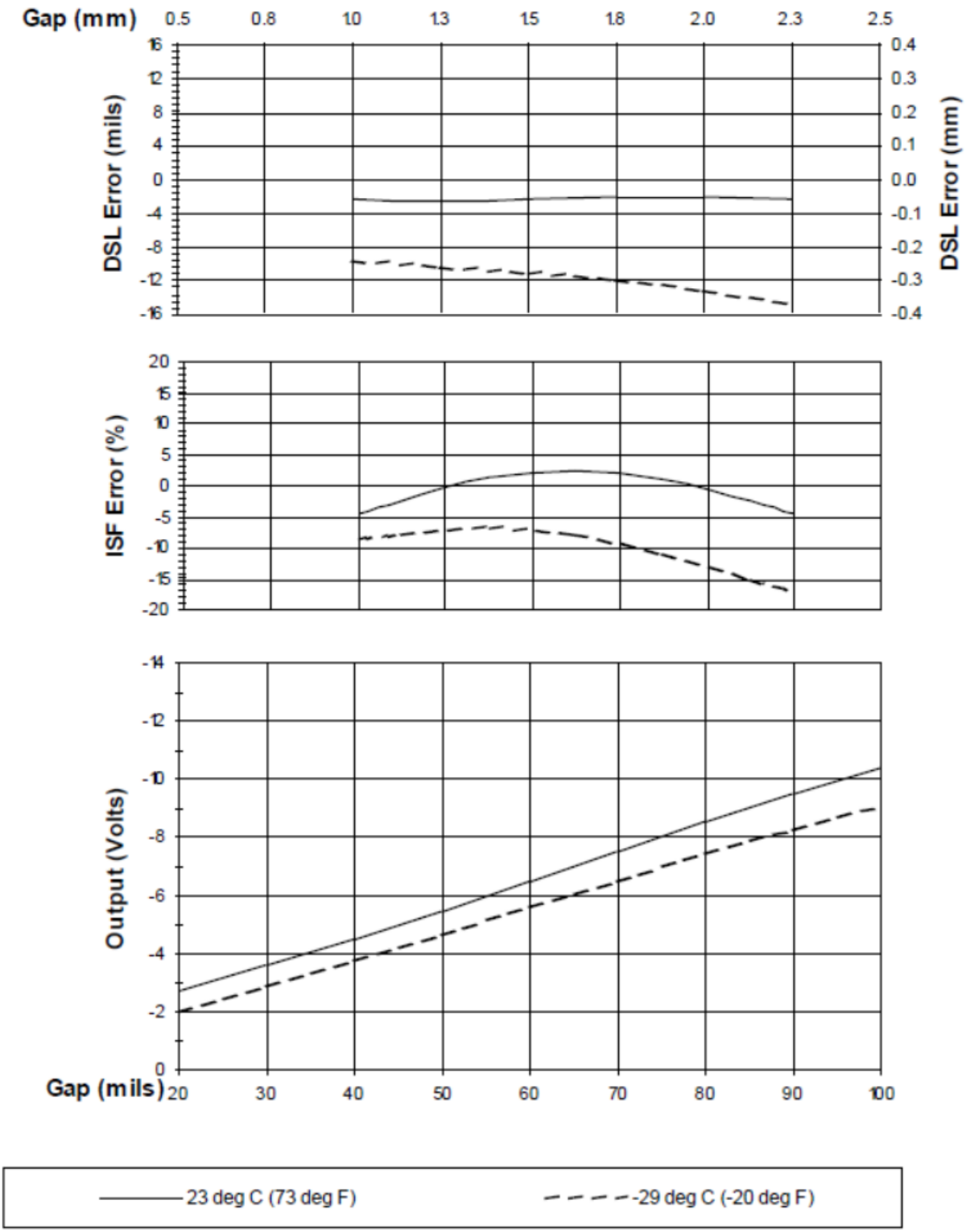


**Figure 8: Typical Radiation Resistant 0.300" 40-ft Probe Only @ Tc**

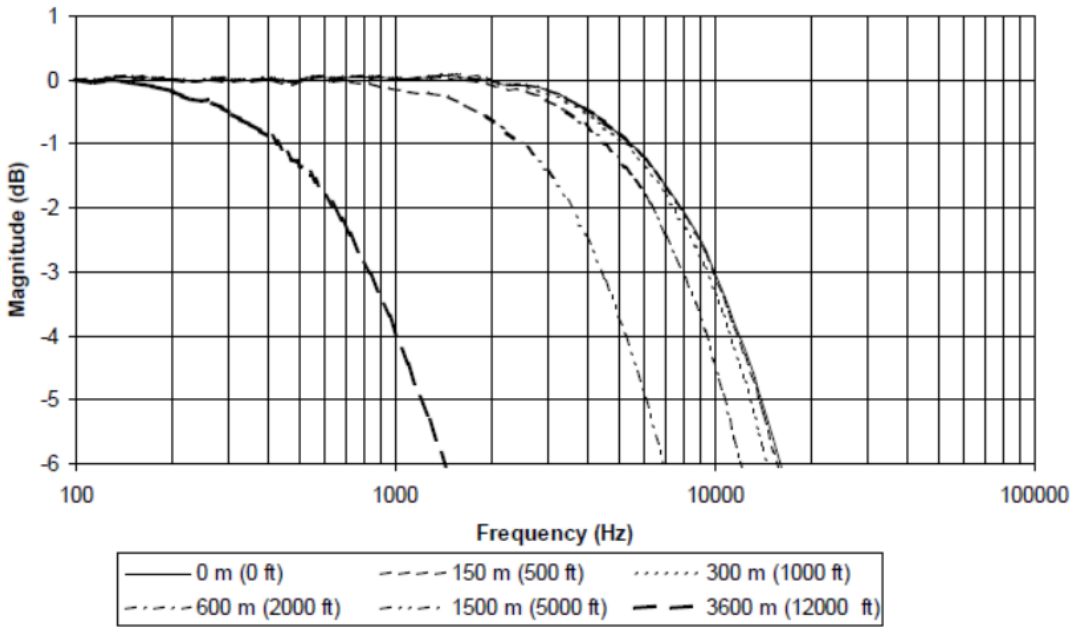


**Figure 9: Frequency Response, typical Radiation Resistant 0.300" 40-ft System with varying lengths of field wiring attached, no barriers**

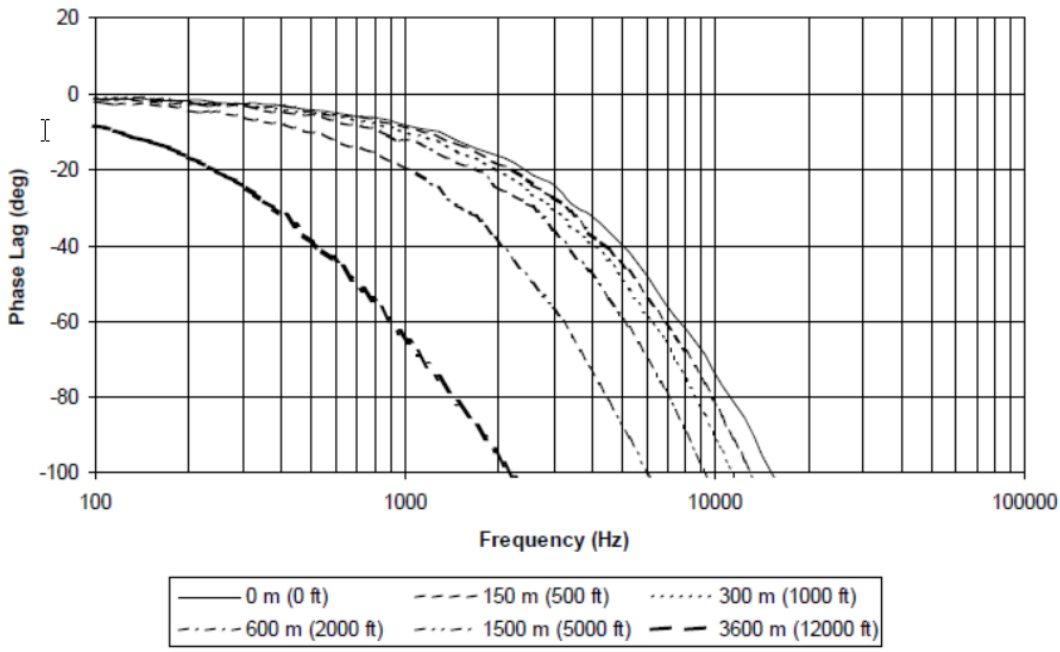


**Figure 10: Phase Response, typical Radiation Resistant 0.300" 40-ft System with varying lengths of field wiring attached, no barriers**

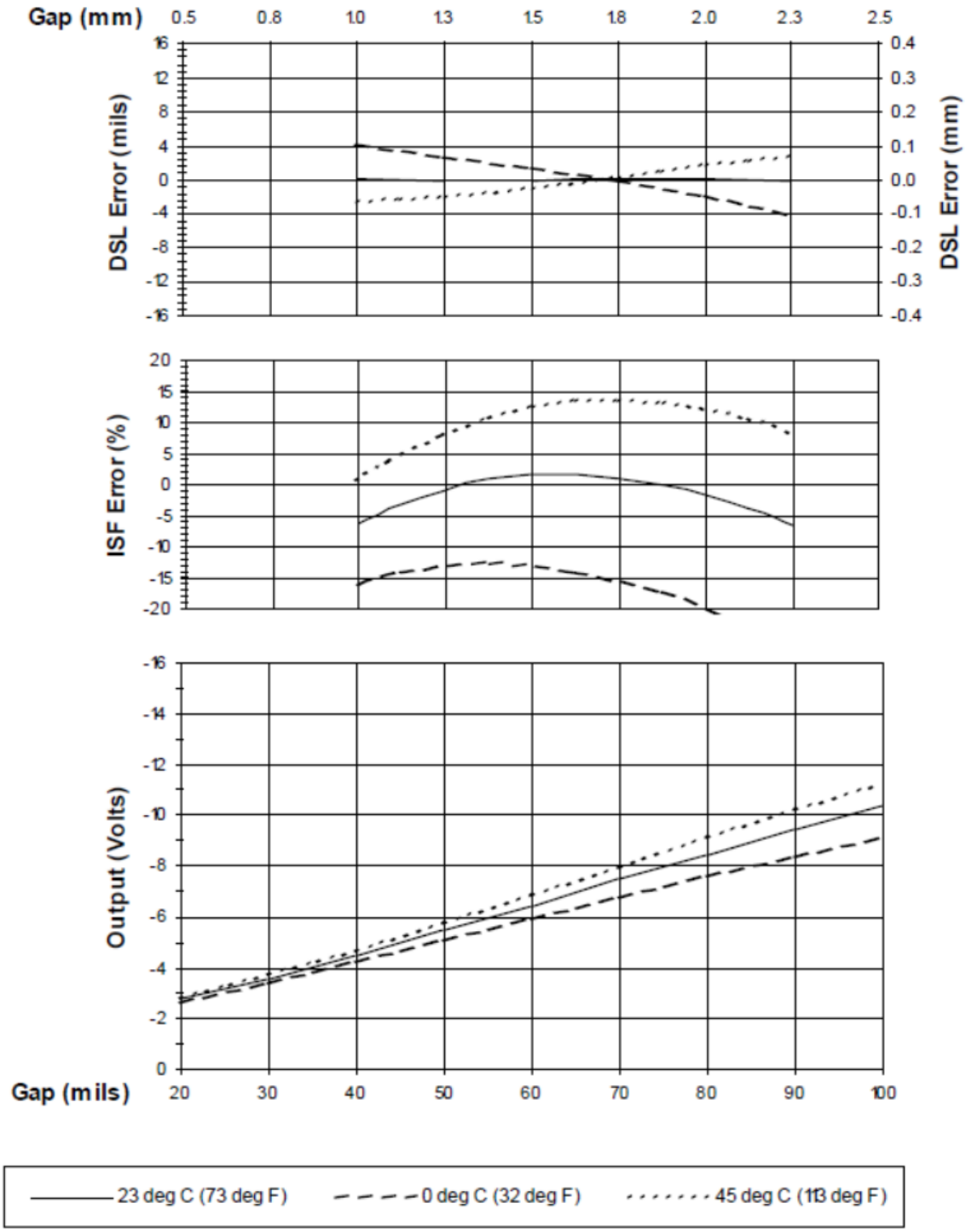


**Figure 11: Typical Radiation Resistant 0.300" 110-ft System over ambient Temperature Range**

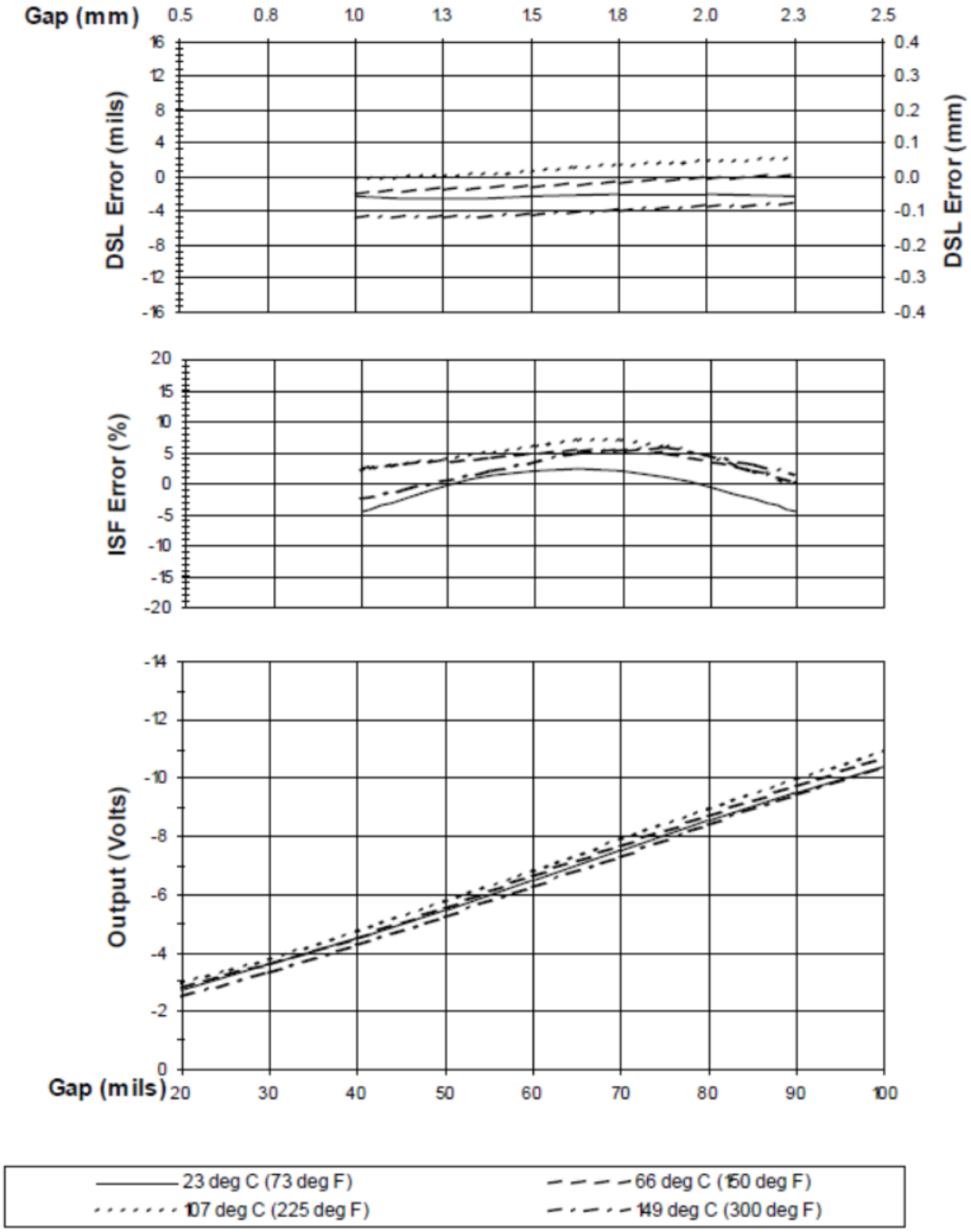


**Figure 12: Typical Radiation Resistant 0.300" 110-ft Probe Only @ Th**



Baker Hughes

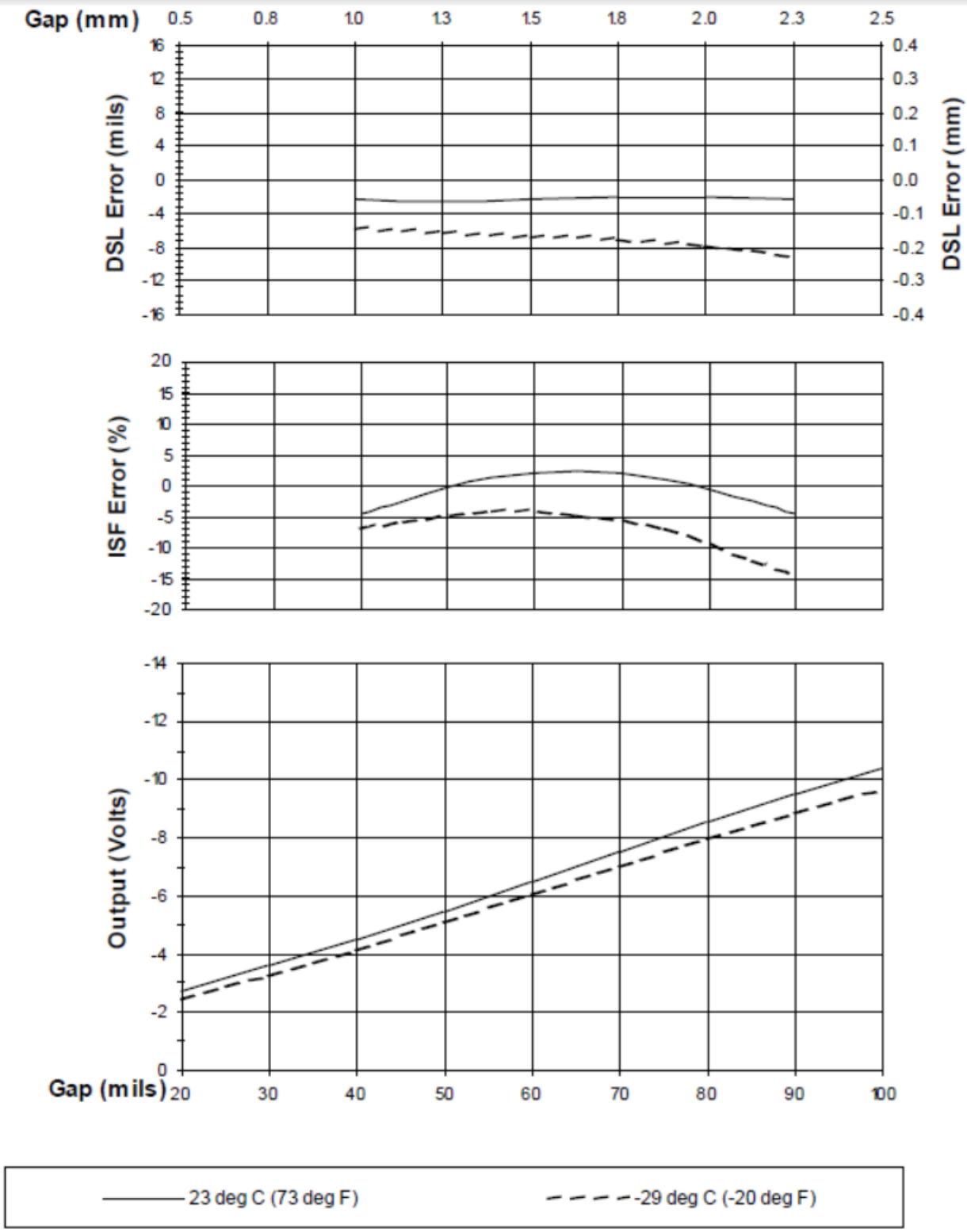


**Figure 13: Typical Radiation Resistant 0.300" 110-ft Probe Only @ Tc**

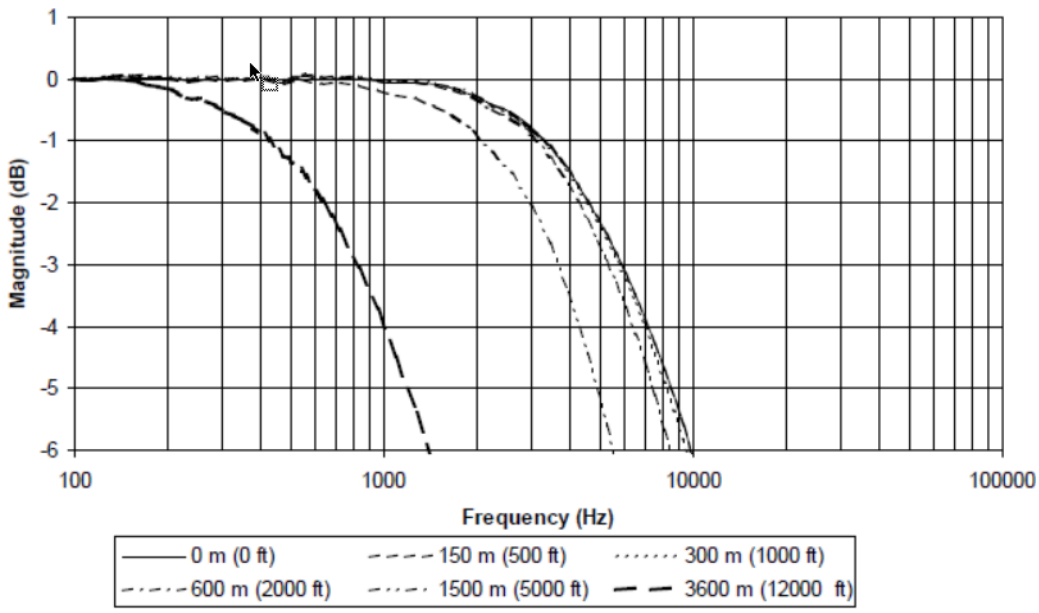


**Figure 14: Frequency Response, typical Radiation Resistant 0.300" 110-ft System with varying lengths of field wiring attached, no barriers**

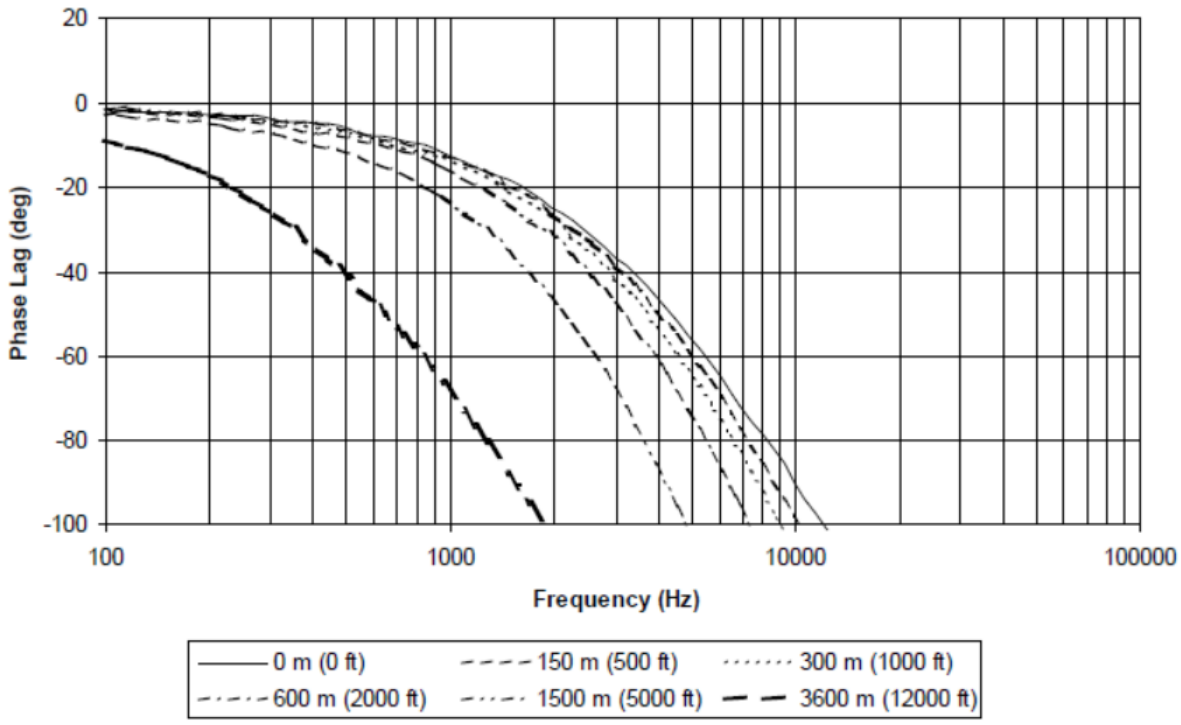


**Figure 15: Phase Response, typical Radiation Resistant 0.300" 110-ft System with varying lengths of field wiring attached, no barriers**

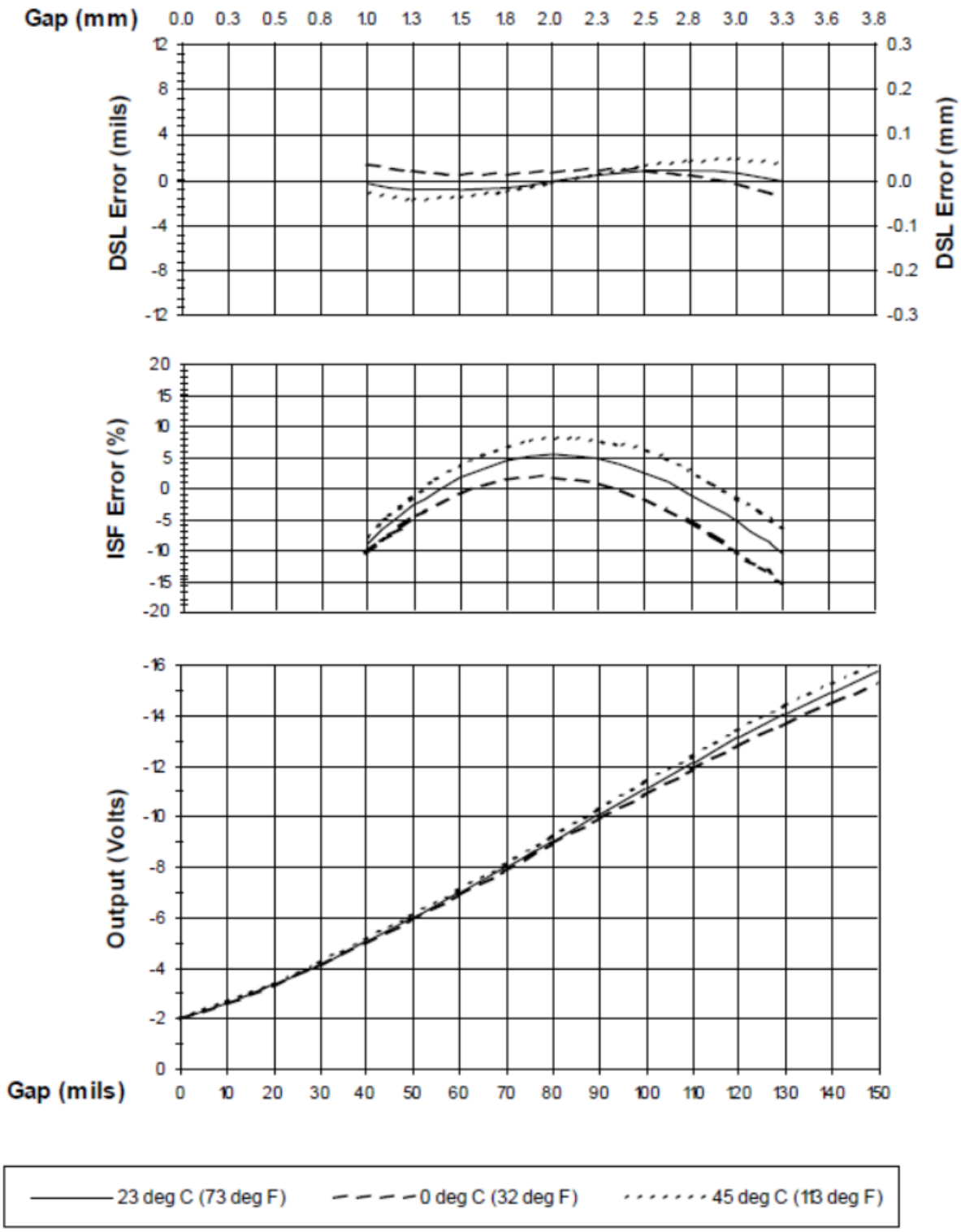


**Figure 16: Typical Radiation Resistant 0.420" 15-ft System over ambient Temperature Range**



Baker Hughes

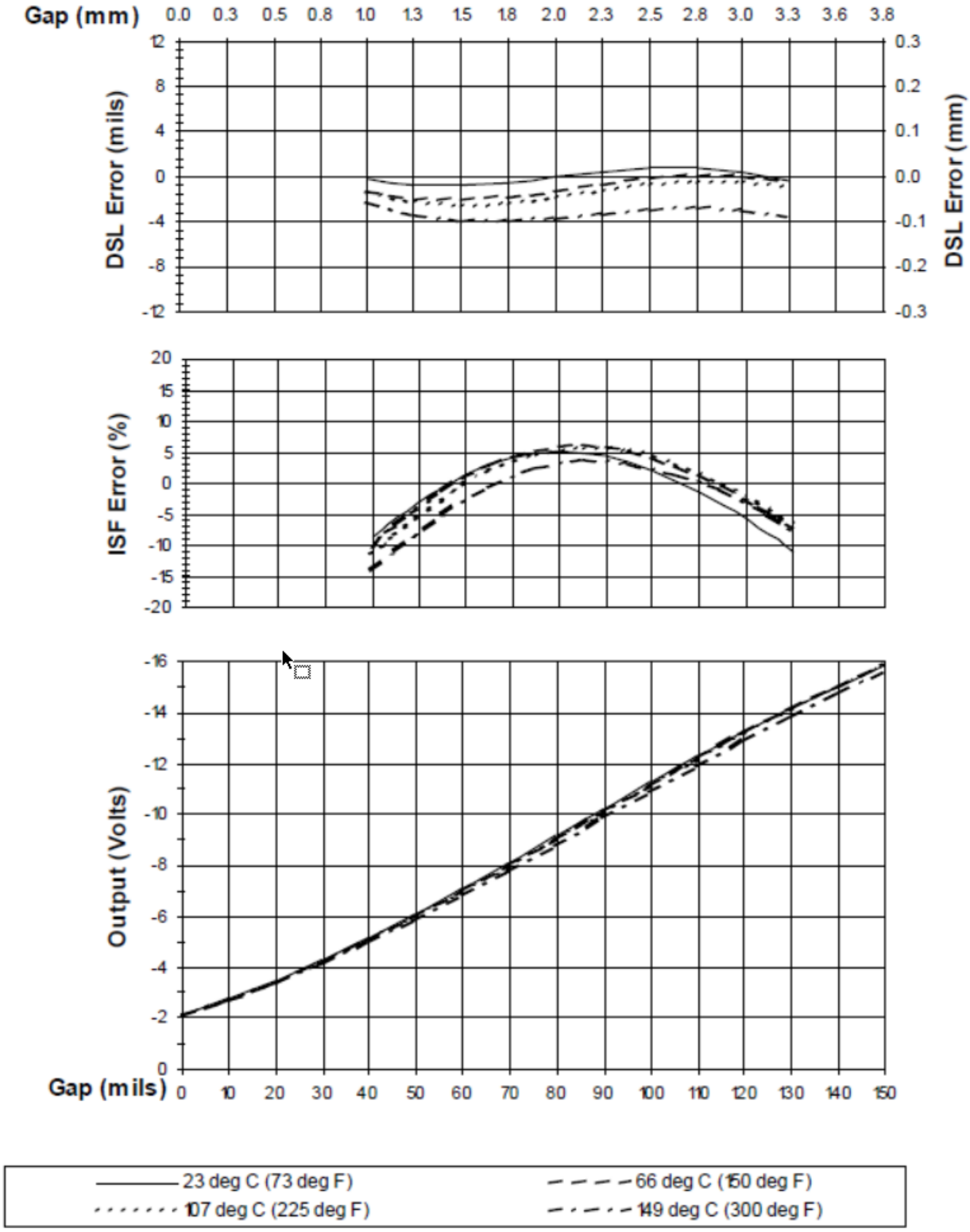


**Figure 17: Typical Radiation Resistant 0.420" 15-ft Probe Only @ Th**



Baker Hughes

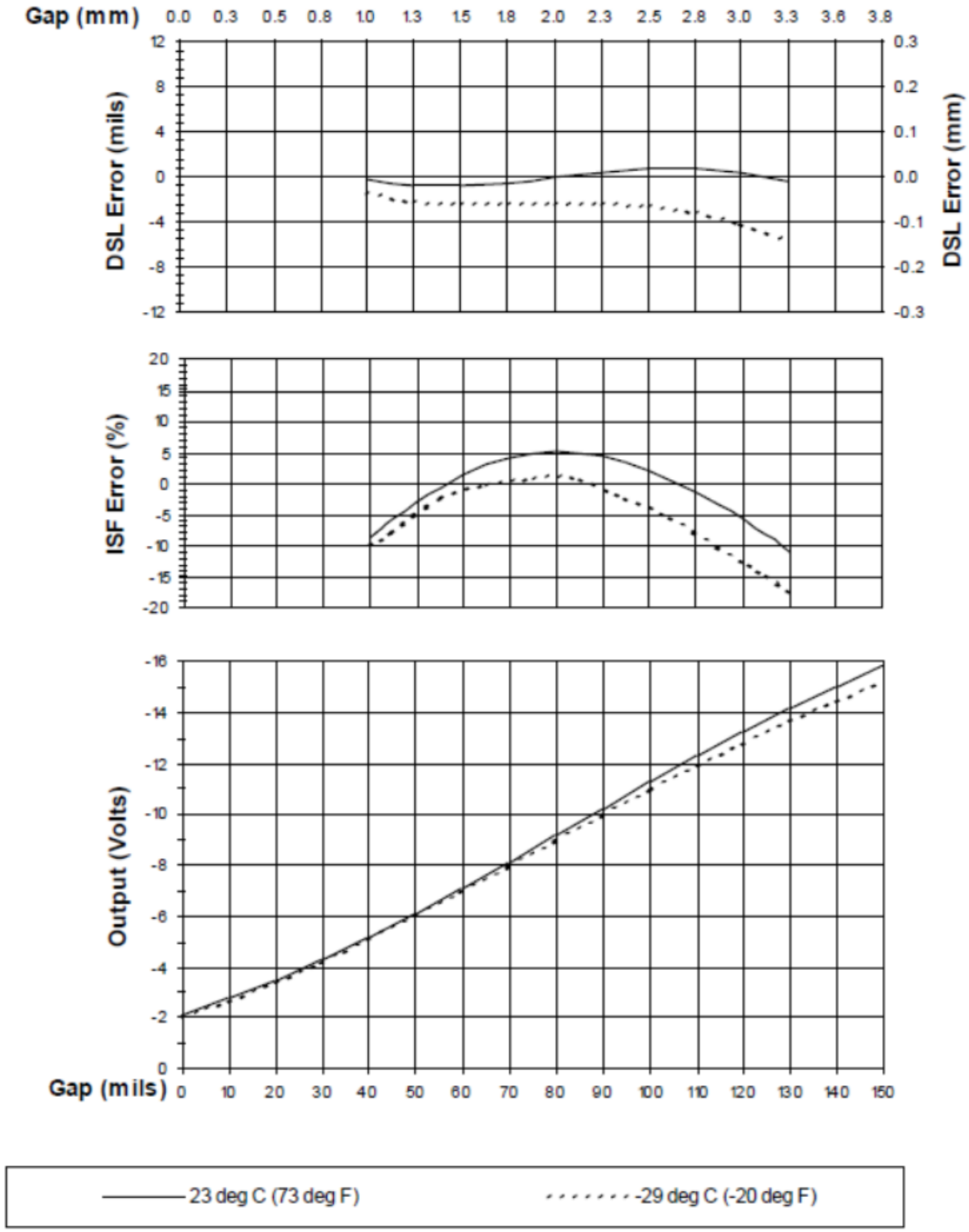


**Figure 18: Typical Radiation Resistant 0.420" 15-ft Probe Only @ Tc**



Baker Hughes

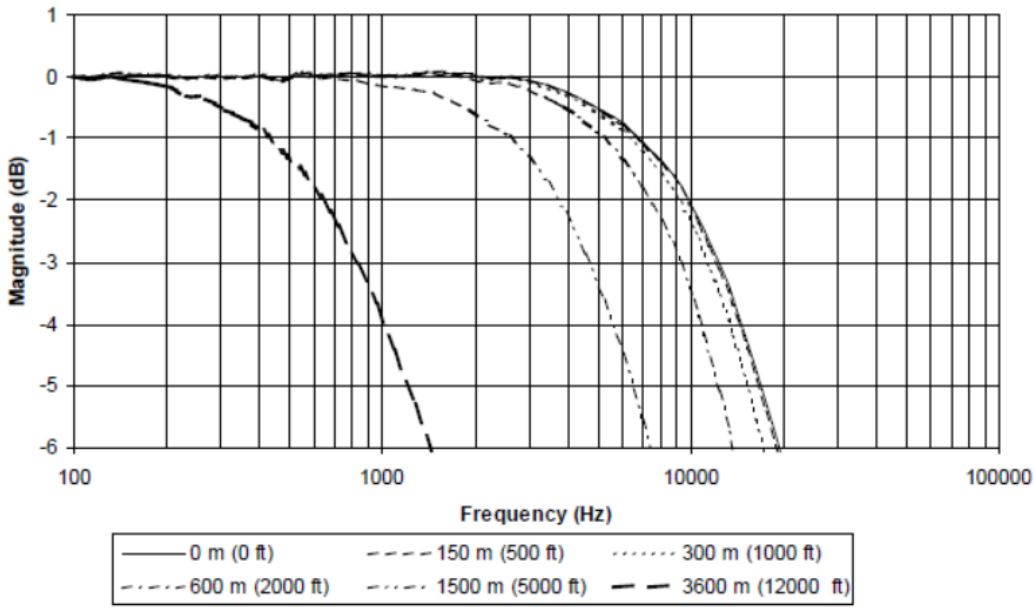


**Figure 19: Frequency Response, typical Radiation Resistant 0.420" 15-ft System with varying lengths of field wiring attached, no barriers**

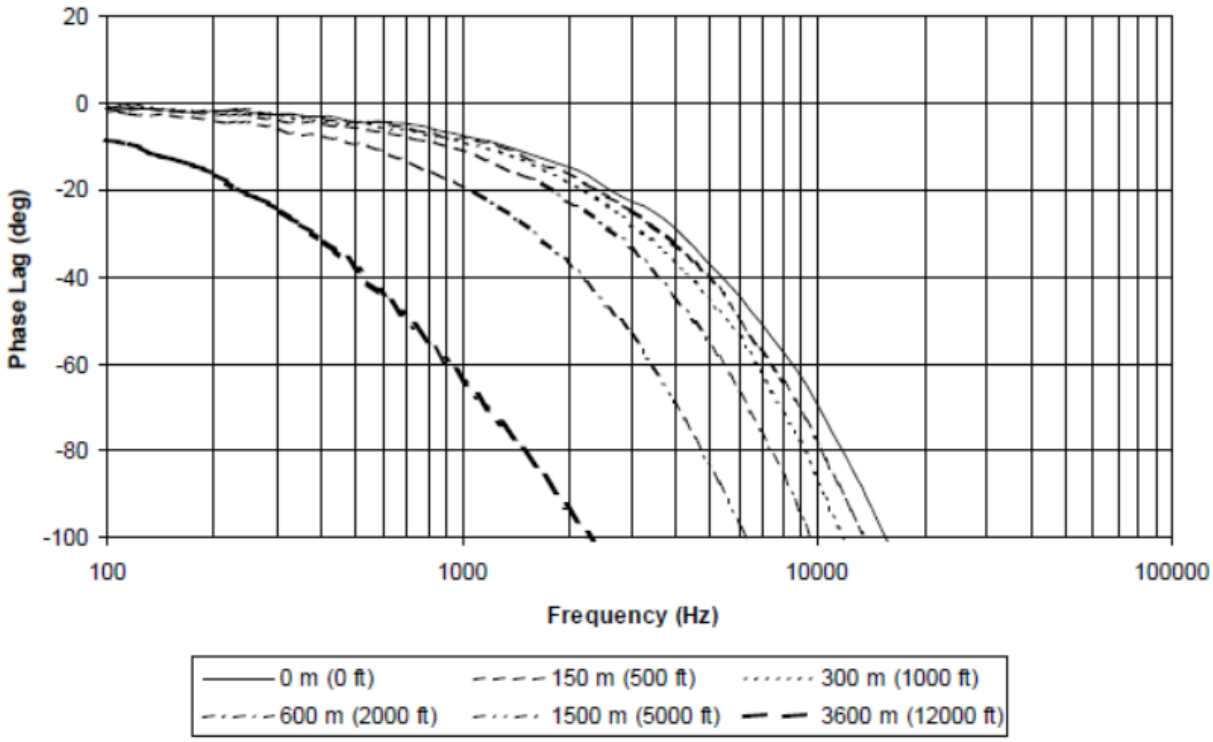


**Figure 20: Phase Response, typical Radiation Resistant 0.420" 15-ft System with varying lengths of field wiring attached, no barriers**

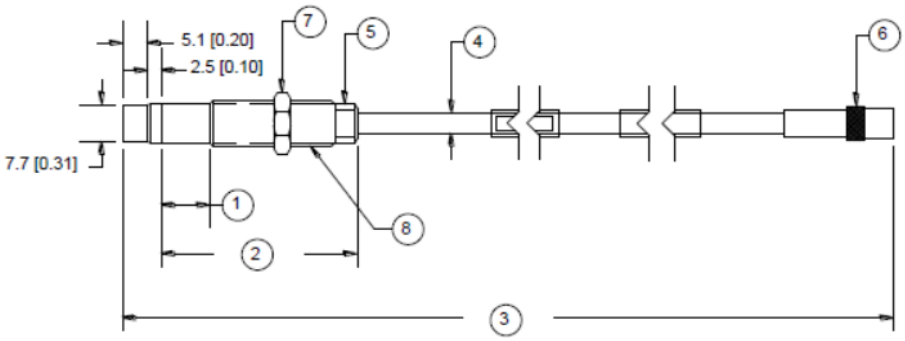


1. Unthreaded Length "AA"
2. Case Length "BB"
3. Total Length "CC", ±7%
4. Coaxial Tefzel cable, 4.3 (0.17) Outside Diameter Maximum
5. 8 (5/16) Wrench Flats, 4 each
6. Miniature Male Coaxial Connector, 7.23 (0.285) Outside Diameter Maximum
7. 14.3 (9/16) Hex for 3/8-24 thread type, 17.0 (0.67) Hex for M10 thread type
8. Case, 300 Series SST, 3/8-24 UNF-2A or M10 thread

**Figure 21: Radiation-resistant Proximity Probe, Standard Mount**

## 36448, 3/8-24 UNF-2A threads 36447, M10x1 threads

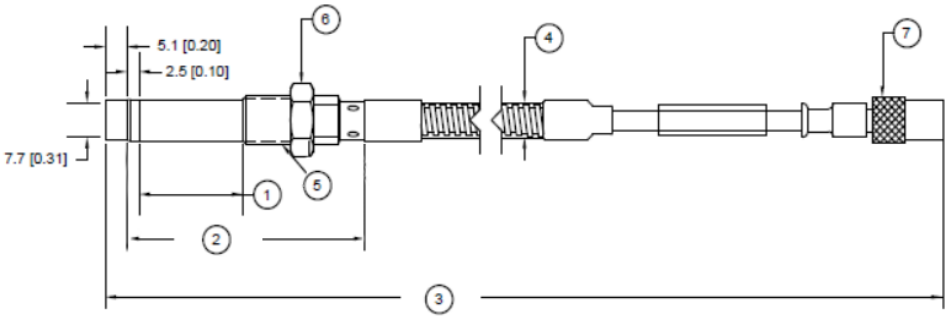


1. Unthreaded Length "AA"
2. Case Length "BB"
3. Total Length "CC", ±7%
4. Tefzel Coated Armor, 9.6 (0.377) Diameter
5. Case, 300 Series SST, 3/8-24 UNF-2A or M10 thread
6. 14.3 (9/16) Hex for 3/8-24 thread type, 17.0 (0.67) Hex for M10 thread type
7. Miniature Male Coaxial Connector, 7.23 (0.285) Outside Diameter Maximum

**Figure 22: 0.300" Radiation-resistant Proximity Probe, Standard Mount Armored**

## 27482, 3/8-24 UNF-2A threads 36446, M10x1 threads

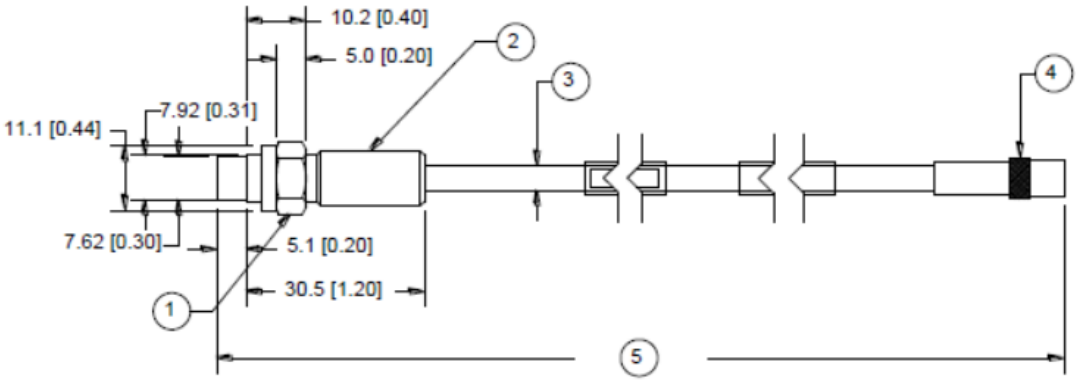


1. 11.1 (7/16) Hex
2. Case, 300 Series SST, 3/8-24 UNF-2A
3. Coaxial Tefzel Cable, 4.3 (0.17) Outside Diameter Maximum
4. Miniature Male Coaxial Connector, 7.23 (0.285) Outside Diameter Maximum
5. Total Length "C", ±7%

**Figure 23: 27485, 0.300" Radiation-resistant Proximity Probe, Reverse Mount**

## 3/8-24 UNF-2A threads

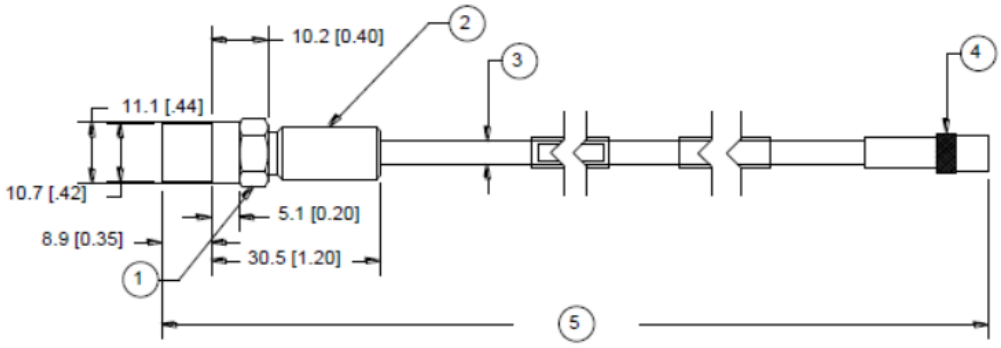


1. 7/16 Hex
2. Case, 300 Series SST, 3/8-24 UNF-2A
3. Coaxial Tefzel Cable, 4.3 (0.17) Outside Diameter Maximum
4. Miniature Male Coaxial Connector, 7.23 (0.285) Outside Diameter Maximum
5. Total length "C", +25%, -10%

**Figure 24: 19056, 0.420" Radiation-resistant Proximity Probe, Reverse Mount**

## 3/8-24 UNF-2A threads

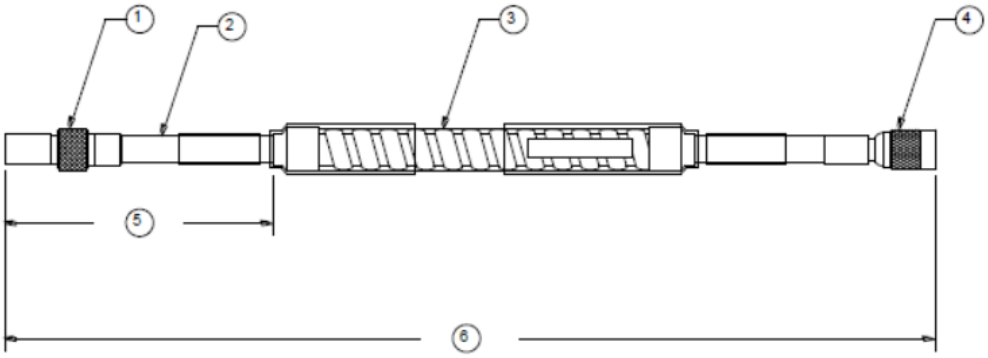


1. Miniature Male Coaxial Connector, 7.2 (0.285) Max. Diameter
2. Coaxial Tefzel Cable, 4.3 (0.17) Outside Diameter Maximum
3. Tefzel Coated Armor, 9.6 (0.377) Diameter
4. Miniature Female Coaxial Connector 7.2 (0.285) Max. Diameter
5. 305 ± 152 (12.0 ± 6), 2 places
6. 27490 .300 cable, Total Length "A", ±7%
7. 127502, .420 cable, Total Length = 12 feet (3.66 metres) +20%/-10%

**Figure 25: Radiation-resistant Extension Cable**

## 27490, 0.300 extension cable; 127502, 0.420 extension cable

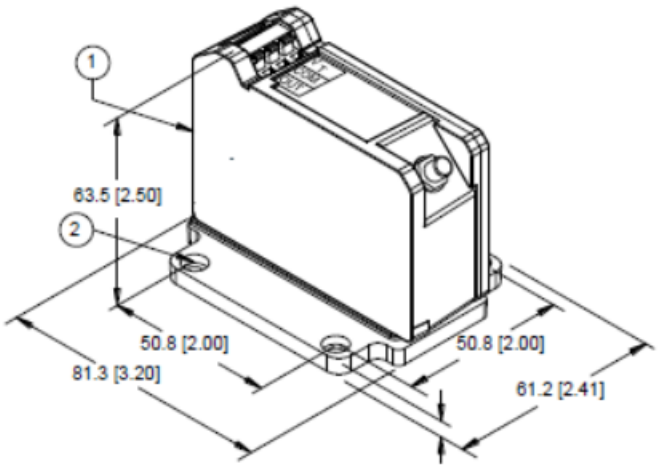


1. Mounting Option "B" = "00"
2. 4.0 (0.158) diameter mounting thru holes, qty

**Figure 26: 330280 and 330281, Panel Mount Radiation-resistant XL Proximitor Sensor**

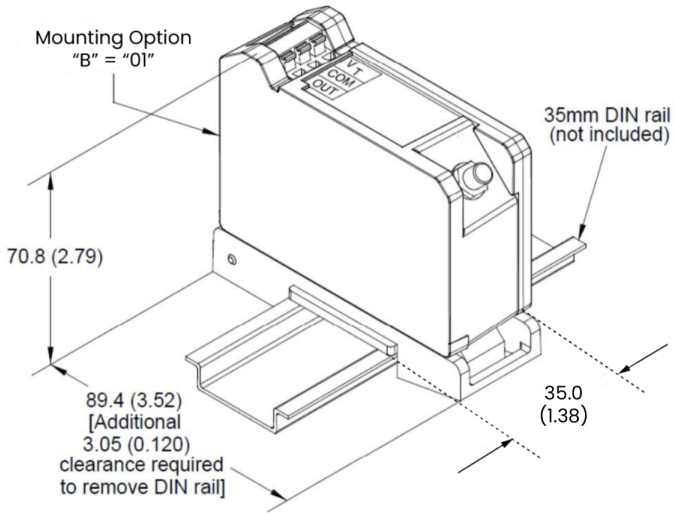


**Figure 27: 330280 and 330281, DIN Rail Mount Radiation-resistant XL Proximitor Sensor**

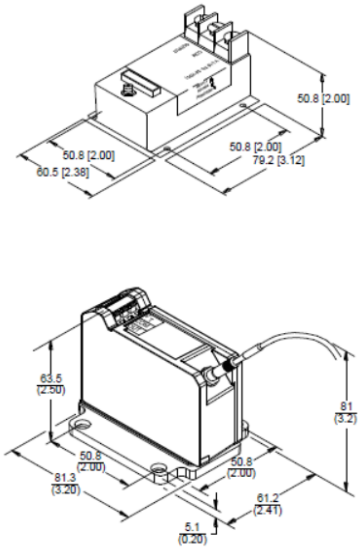


**Figure 28: Physical mounting characteristics showing interchangeability of the 3000 and XL Radiation Resistant Proximitor Sensors when 4-hole mounting**

Notes:

1. All dimensions on figures are in millimeters (inches) unless otherwise noted.
2. Standard mount 0.300 probes supplied with 17 mm or 9/16-inch lock nut.
3. Reverse mount probes are not available with armor.
4. Letters inside quotation marks on figures refer to probe ordering options.
5. Stainless steel armor is supplied with Tefzel outer jacket.
6. Coaxial cable contains Tefzel dielectric and outer jacket.

Copyright 2026 Baker Hughes Company. All rights reserved.

Bently Nevada, a Baker Hughes Company

1631 Bently Parkway South, Minden, Nevada USA 89423

https://bntechsupport.com